FOUNTAINS & LAKES

Catalogue

Oase
LIVING WATER

OASE – PASSIONATE ABOUT WATER.

Discover OASE

If you want to discover OASE, you will have to travel into the countryside. More precisely into the region known as Tecklenburger Land, a water-rich landscape with peat bogs, wetland habitats and canals. No wonder that water is the central theme at OASE.

Water is our element – the reason for our products, the objective of our research and development, the measure of our actions and the habitat space that we shape. OASE started with water gardens. Today we are a single source for everything associated with garden design and aquaristics – inspired by nature and our customers.

Contents

24 NOZZLES
NEW 30 JumpingJet Rainbow Star
NEW 32 JumpingJet Rainbow Flash
34 VarioSwitch
36 Swivel
NEW 38 Multi Directional Drive L 2D
NEW 40 Multi Directional Drive XL 2D
NEW 42 Multi Directional Drive L 3D
NEW 44 Multi Directional Drive XL 3D
NEW 46 Rotation modul L
NEW 48 AirNozzle
NEW 52 LiquidArtWall
54 FlashWall
56 VarioJet
58 CrownNozzle
NEW 59 VarioJet CrownNozzle
60 FountainFlame
NEW 62 BigFlameAqua
64 Fog/Mist System
NEW 66 Comet Silver
68 Comet T
NEW 70 Comet Prec
NEW 72 Cluster Eco
74 Hollow Jet nozzles
76 High Jet / Geyser Jet
77 Lava
78 Water Sphere / Hemisphere
NEW 80 Fan Jet
NEW 82 WaterScreenNozzle
84 Grand Vulkan / Trumpet Jet
85 Vulkan
86 Finger nozzle
87 Gushing nozzle
88 Rotating nozzle
90 Schaumsprudler
94 Cascade
98 Geiser
102 Mylar lace

104 FLOATING FOUNTAINS
108 PondJet / PondJet Eco
110 MIDI II / MAXI II
112 Fountain attachments
NEW 114 Illumination sets

116 PUMPS
120 VARIONAUT PUMPS
122 Varionaut 90 24 V
124 Varionaut 150 24 V
NEW 126 Varionaut 240 24 V
128 Varionaut 150 230 V
NEW 130 Varionaut 270 230 V
NEW 132 Varionaut 400 230 V
134 Water feature pumps
136 Universal pumps
140 Block centrifugal pumps
142 Multi-stage structured submersible motor-driven pumps

144 ILLUMINATION
148 LED-ILLUMINATION
NEW 152 LED configurator
154 ProfiLux LED 110 /DMX/02
156 ProfiLux LED 320 /DMX/02
158 ProfiLux LED Spot 1500 /DMX/02
160 ProfiLux LED Flood 1500 /DMX/02
162 ProfiPlane LED 110 /DMX/02
164 ProfiPlane LED 320 /DMX/02
166 ProfiRing LED 320 /DMX/02
168 ProfiLux LED 350 /01
170 ProfiLux LED 1100 /01
172 ProfiLux LED Spot 2200 /01
174 ProfiLux LED Flood 2200 /01
176 LED Stripe
178 Spotlight holder
NEW 180 LED-Modul MDD L 2D /DMX/02
NEW 180 LED-Modul MDD L 3D /DMX/02
NEW 182 LED-Modul MDD XL 2D /DMX/02
NEW 182 LED-Modul MDD XL 3D /DMX/02

184 POWER
186 Cable ducts
188 Underwater cable connectors
188 JunctionBox
190 Power splice
192 Connecting cable power
194 Connecting cable DMX
194 DMX-Box /01
196 Extension cable hybrid
197 Hybrid connection box
197 Power connection box
198 Underwater LED Driver
200 Underwater Switch
202 Underwater power supply
204 Electrical switch
206 WECS II 512/1024
208 WECS II 512/1024 Webserver extension
210 WEPS Software
212 WECS II 2048
214 WECS Software
216 Electronic water level control
216 Solenoid valves
218 Water-level sensors
220 Wind-dependent fountain control
222 Underwater transformer
223 Accessories

224 WATER QUALITY
228 Aerators
232 Sand filter
234 Skimmers
NEW 236 Clear Fountain System II
238 Water treatment
241 Water analysis

242 ACCESSORIES
244 In-ground niches
246 Floor-drain armatures
248 Overflow / drain armatures
250 Return armatures
252 Inflow nozzles
252 Floor / wall transitions
254 Overflow / return armatures
256 Suction filter baskets
258 Armatures

260 OTHER
260 Comments
261 Energy efficiency classes of OASE spotlights
262 Abbreviations
263 Conversion tables
264 Product overview – alphabetic
267 Product overview by order no.
270 OASE Commercial Quickfinder

10 good reasons to choose OASE

OASE. THE GLOBAL PARTNER. PASSIONATE ABOUT WATER.

Experience 1

In business for more than 65 years – made in Germany.

Innovation 2

Continuous progress in research, development and production.

Network 3

Cooperation with regional partners for comprehensive know-how.

Support 4

Global on-site support thanks to employees and partners in 62 countries.

Security 5

Solid financial basis for the implementation of major projects.

All-rounder 6

The entire sector-specific range of services are covered.

Flexibility 7

The company's own open-source hard- and software can be used.

Fairness 8

The same high level of service and performance for all projects.

Reliable technology 9

Precise control and less downtime due to remote maintenance.

Individuality 10

Bespoke solutions, special requests and development of new water attractions.

Fountain Technology

Artworks out of water

Fountain installations, fountains and water effects – OASE develops and implements innovative solutions, made in Germany. Collaborations with specialists in planning, construction and maintenance result in masterpieces of design.

OASE. THE GLOBAL PARTNER. PASSIONATE ABOUT WATER.

Lake Management

A source of inspiration

OASE sees itself as a partner for water creations and management. A particular focus is on sustainable systems based on German technology and know-how that are innovatively implemented by our global partner network .

OASE. THE GLOBAL PARTNER. PASSIONATE ABOUT WATER.

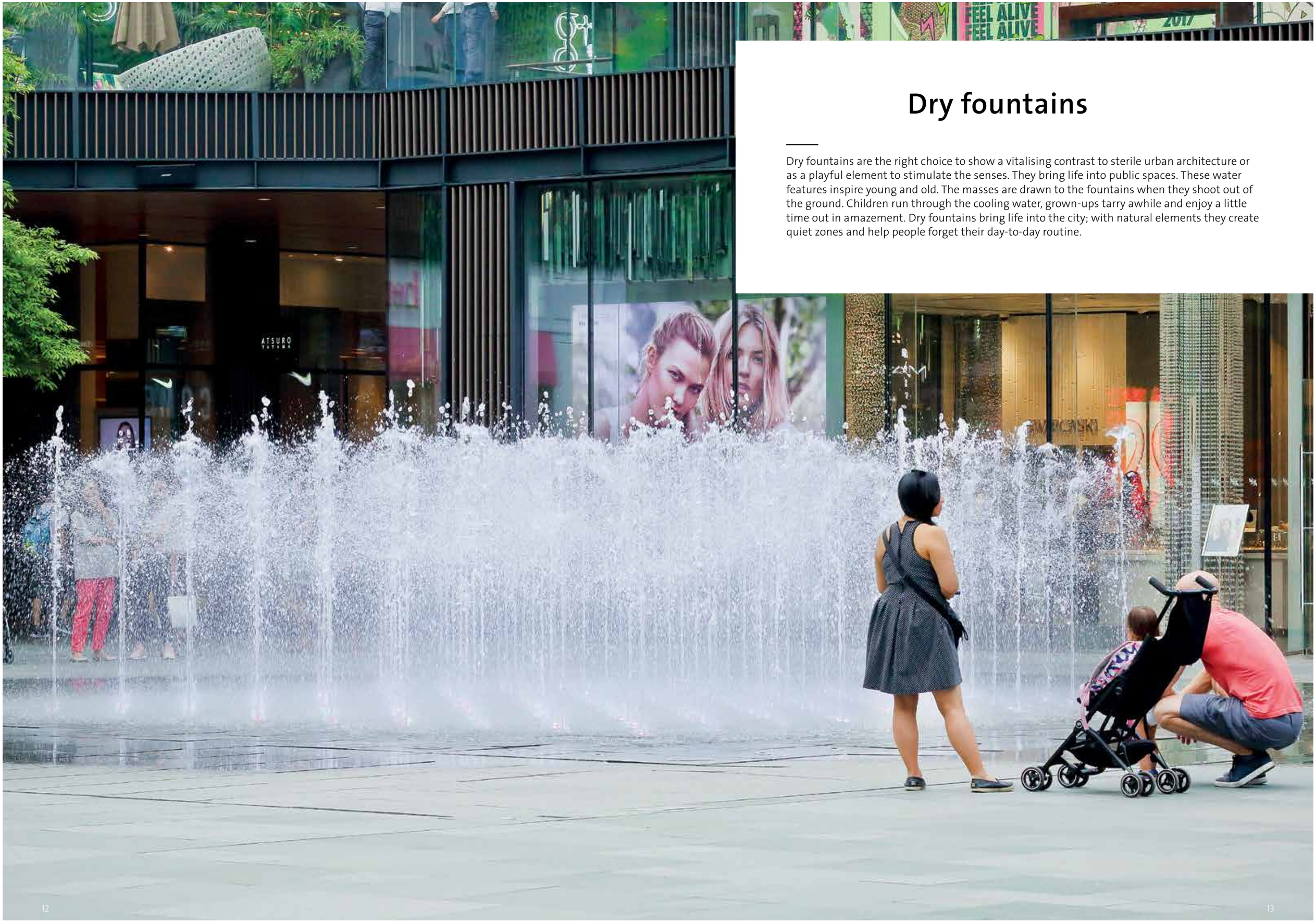

Dry fountains

Dry fountains are the right choice to show a vitalising contrast to sterile urban architecture or as a playful element to stimulate the senses. They bring life into public spaces. These water features inspire young and old. The masses are drawn to the fountains when they shoot out of the ground. Children run through the cooling water, grown-ups tarry awhile and enjoy a little time out in amazement. Dry fountains bring life into the city; with natural elements they create quiet zones and help people forget their day-to-day routine.

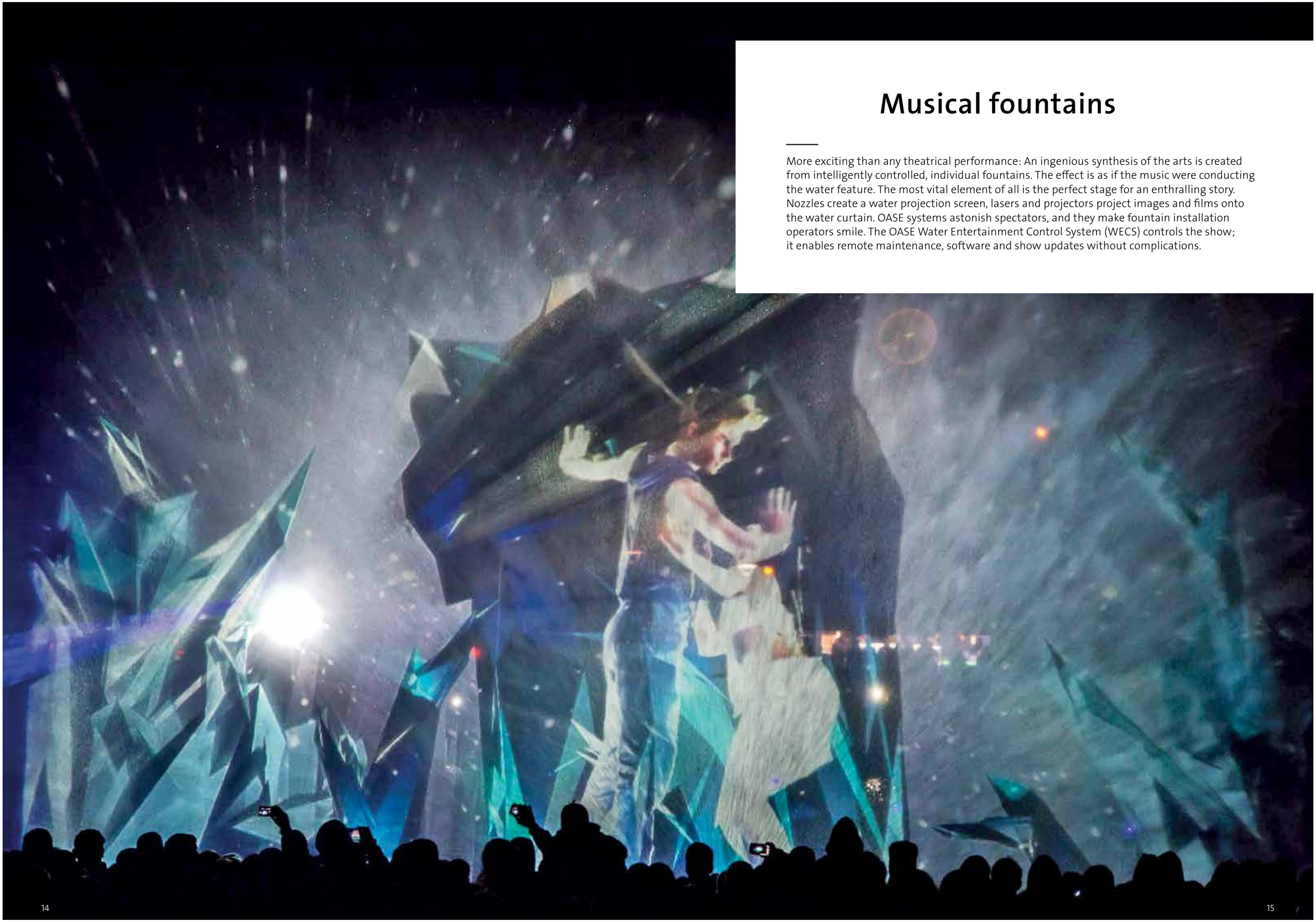

Musical fountains

More exciting than any theatrical performance: An ingenious synthesis of the arts is created from intelligently controlled, individual fountains. The effect is as if the music were conducting the water feature. The most vital element of all is the perfect stage for an enthralling story. Nozzles create a water projection screen, lasers and projectors project images and films onto the water curtain. OASE systems astonish spectators, and they make fountain installation operators smile. The OASE Water Entertainment Control System (WECS) controls the show; it enables remote maintenance, software and show updates without complications.

Floating fountains

Floating fountains are designed for different applications and can be used on lakes, ponds or in seawater. The particular advantage: Installation and commissioning of our floating fountain shows do not require a solid foundation. Instead a flexible platform holds the technology and the modules. This means there are limitless possible variations for small and large applications – from a single fountain to an overwhelming installation consisting of many different components.

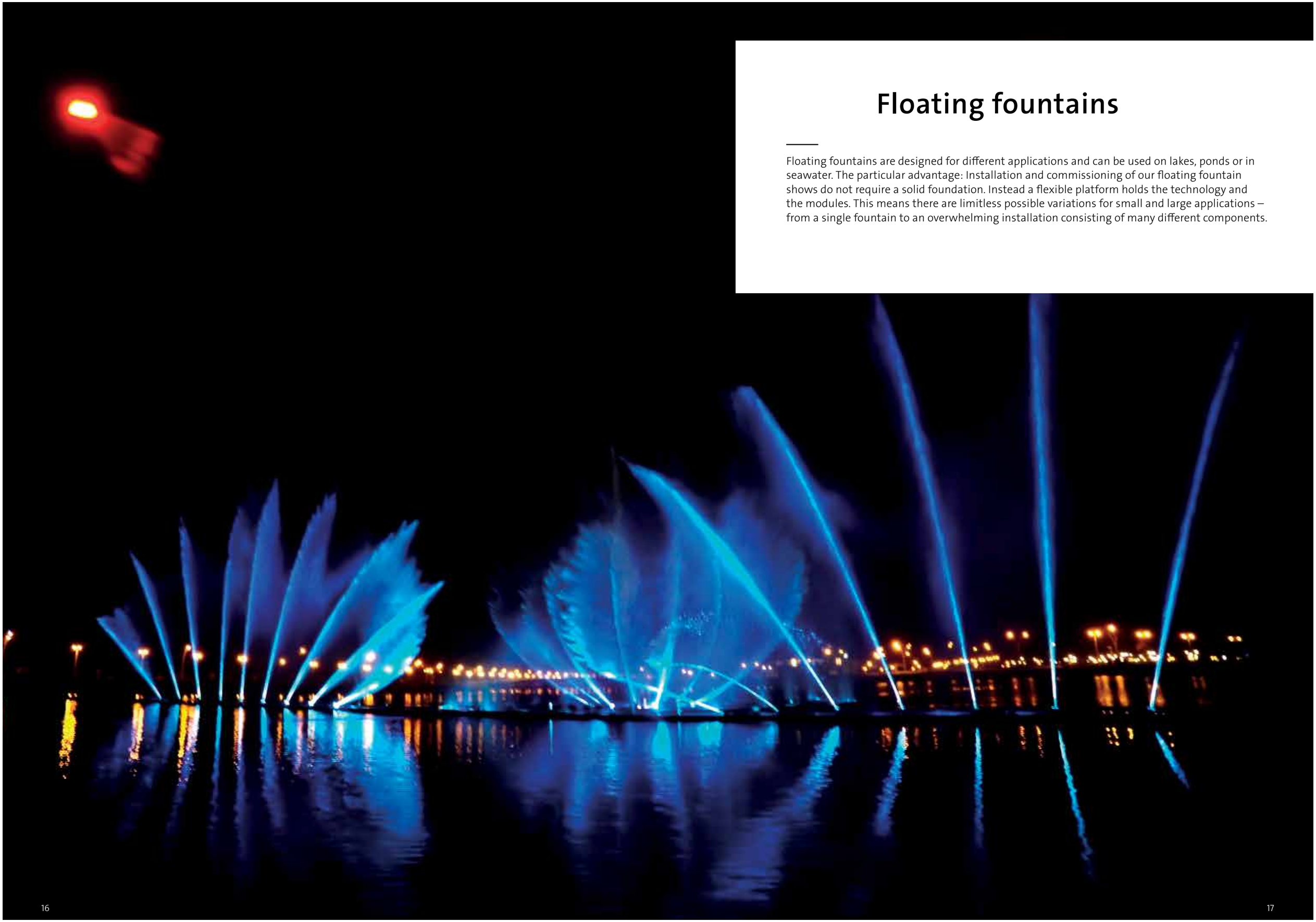

Show fountains

Show fountains ensure unforgettable moments, eyes and mouths opened wide in amazement. They pull in the crowds at hotels or in parks. Often they become the landmark, the attraction in public spaces. This is where OASE brings all disciplines together and stages an elaborately designed interplay of water, fire, light and music. The results are unique water spectacles that keep the audience in awe.

OUR EFFECTS

Fascinating moments

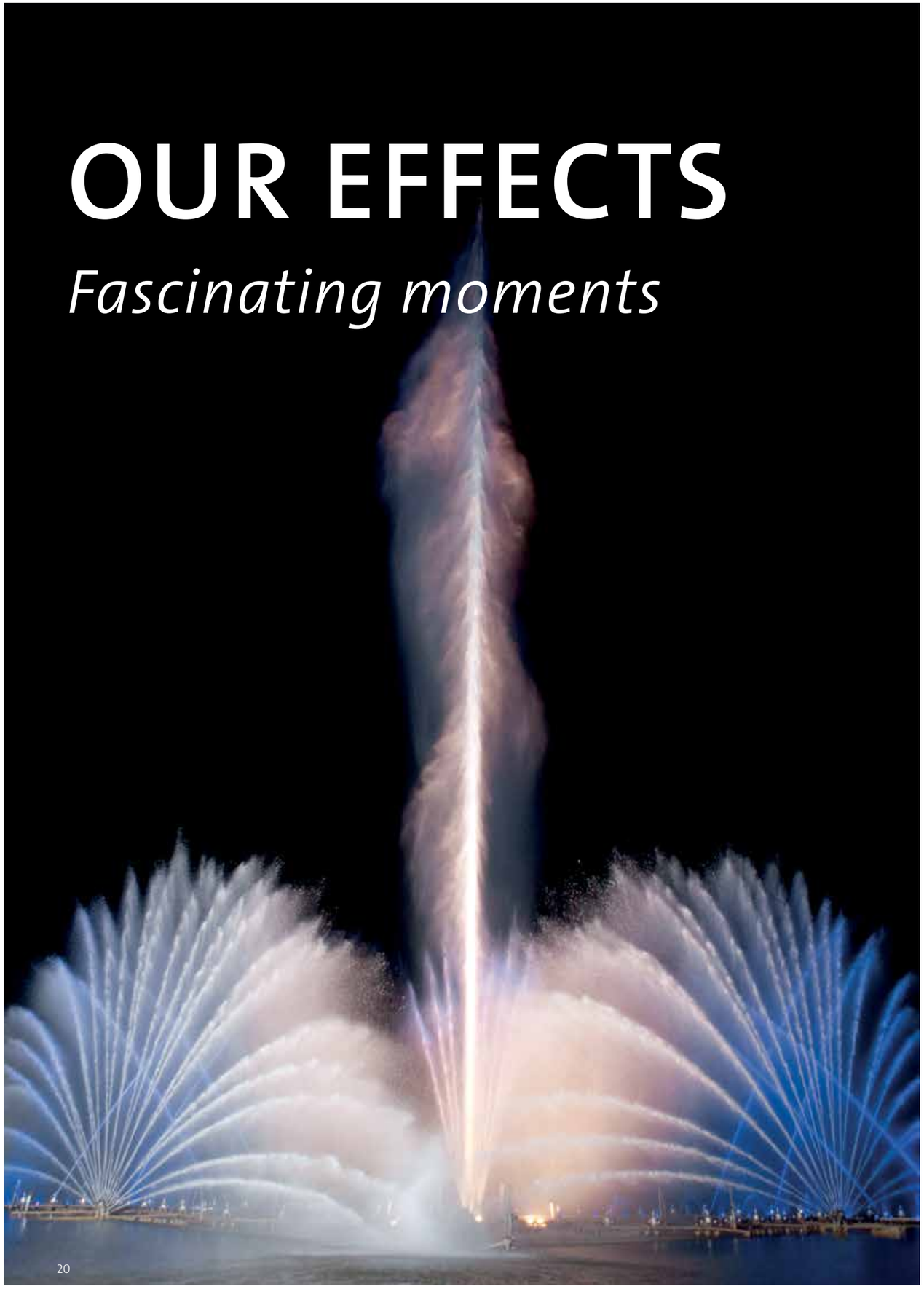

Arch

A perfect arch of water – it forms a frame for a special view. The arch effect allows multifaceted illusions. At night in particular, it creates spatial depth. Whether contiguous or sequential, the jets are illuminated over the entire length.

Veil

Clear the stage: The imposing wall of water attracts attention and amazes spectators. Thanks to the uniform water pattern, motifs and videos can be projected onto the water curtain in the same way as on a cinema screen. This transforms the veil effect into the heart of every fountain show.

Column

OASE accepts no liability for stiff necks – we do, however, guarantee enthusiastic crowds. Whether illuminated or not, water columns that shoot skyward create a special fascination. They take water entertainment to undreamt-of heights and crown the fountain show.

Array

Rotating nozzles generate complex and dynamic presentations, with an effect that is simply enthralling. Extravagant and surprisingly different: The array effect creates that special something for water feature compositions that are full of character and rich in variety.

Wall

In surfaces OASE sees creative opportunities – in a wall OASE sees a potential projection surface for the realization of imaginative creations. When water flows, different water patterns occur on surfaces. The visual and acoustic variations capture our fascination.

Fall

Falling water has a special charm – the movement, the sound and the reflections of light are a balm for the soul. This special natural feature is used for the fall effect. It is a vitalising element and it stimulates visual and auditory senses in a playful manner.

Mist/Fog

Fog is mystic and in combination with water, it is imposing. In addition, through its evaporation, fog has a cooling effect on the environment and on spectators, who therefore experience the water feature with greater intensity.

Pool

Water fascinates, it reflects moods: Sometimes it is effervescent, sometimes calming. Pools underscore the individual character of objects. Different flow and light effects generate unique moments that are framed by carefully selected materials.

Matrix

Limitless design possibilities: The individually controllable water carpet moves rhythmically in a choreographed routine of light and sound. The many individual water jets generate a three-dimensional space, which with LED spotlights has an even more voluminous effect.

Play

Water features give nothing but pleasure. At OASE the play effect says it all. Children with wide eyes run through the water with glee – happiness is manifest in play. The fountains invite people to interact with water.

Fire

Fire and water – at first glance, these two elements do not match. OASE proves the contrary! A gas flame that dances on a variable water jet – against the clear night sky as a backdrop, this creates spectacular special effects.

Gallery

Making water dance and creating magical effects: OASE has always been passionate about water. Since its founding, OASE has continuously built on its experience to develop the most amazing water effects of today and the future.

Controllable and classic nozzles

A marvellous show consists of many individual components. Only in their entirety and in perfect coordination do they create very special moments. Whether as Schaumsprudlers, pirouettes, single water jets, fans, water curtains or dancing flames – nozzles provide scope for creative freedom and variation. Classic and controllable nozzles can generate different water patterns through the different control options. Nozzles can be used flexibly; you determine the level of individualisation. OASE offers a solution for every requirement.

CONTROLLABLE NOZZLES

30 JumpingJet Rainbow Star
32 JumpingJet Rainbow Flash
34 VarioSwitch
36 Swivel
38 Multi Directional Drive L 2D
40 Multi Directional Drive XL 2D
42 Multi Directional Drive L 3D
44 Multi Directional Drive XL 3D
46 Rotation modul L
48 AirNozzle
52 LiquidArtWall
54 FlashWall
56 VarioJet
58 CrownNozzle
59 VarioJet CrownNozzle
60 FountainFlame
62 BigFlameAqua
64 Fog/Mist System

CLASSIC NOZZLES

66 Comet Silver
68 Comet T
70 Comet Prec
72 Cluster Eco
74 Hollow Jet nozzles
76 High Jet / Geyser Jet
77 Lava
78 Water Sphere / Hemisphere
80 Fan Jet
82 WaterScreenNozzle
84 Grand Vulkan / Trumpet Jet
85 Vulkan
86 Finger nozzle
87 Gushing nozzle
88 Rotating nozzle
90 Schaumsprudler
94 Cascade
98 Geyser
102 Mylar lace

New products

Nozzles | controllable

Page 30 **JumpingJet Rainbow Star**
Page 32 **Rainbow Flash**
Page 38 **Multi Directional Drive L 2D, XL 2D, L 3D, XL 3D**
Page 59 **VarioJet CrownNozzle**
Page 62 **BigFlameAqua**

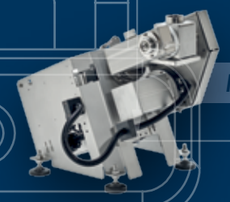

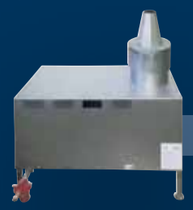

New products

Nozzles | classic

Page 70 **Comet Prec**
Page 72 **Cluster Eco**

	Fresh Water	Pool Water	Sea Water	220-240 V	400 V	110-120 V	50 Hz	60 Hz	12 V AC	24 V DC	DMX	DMX/ RDM	Plug and Spray
JumpingJet Rainbow Star II /DMX/02	●	●	○	○	○	○	○	○	○	●	●	●	●

JumpingJet Rainbow Star II /DMX/02

Water jets with a diameter of 12 mm magically shoot through the air in broad arcs and disappear, just as unexpectedly as they appeared – JumpingJet systems are the attraction in leisure parks and amusement parks, in discotheques, at trade shows, exhibitions, and other events.

The combination options give the system an individual flair: the colour of the integrated RGBW LED light can be freely selected and the laminar water jets can be cut into short sections as well. In addition, the JumpingJet can be combined with controllable pumps to create additional dynamic parabolic pitches and heights. The JumpingJet is now equipped with the 24 V DC technology thus integrating ideally into the OASE 24 V DC system. The new JumpingJet Rainbow Star II /DMX/02 is DMX/RDM capable.

Product characteristics at a glance

- Jet diameter 12 mm
- Can be used indoors and outdoors
- Precise, crystal clear, laminar water jet
- Surprising water features, dynamic parabola possible
- Intergrated illumination effects with strong RGBW-LED light
- 24 V DC technology
- Cut off function
- DMX/RDM capable (combined with WECS)

JumpingJet
Rainbow Star II /DMX/02

JumpingJet
Rainbow Star II /DMX/02

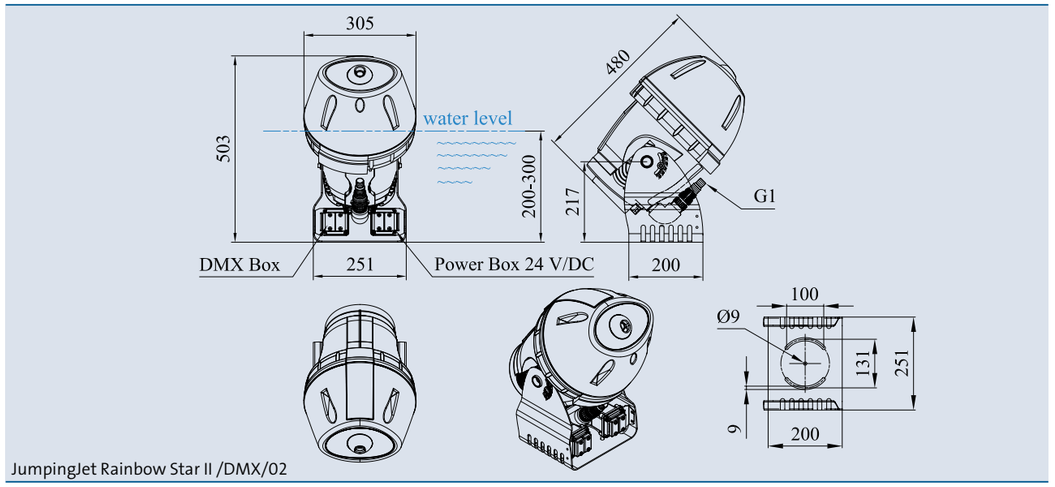

JumpingJet Rainbow Star II /DMX/02

Technical note

When operating the JumpingJet Rainbow-Star, water can splash, particularly with water jets that are shot quickly in succession. The amount of splash water is negligible if the water jet is operated as a full, continuous parabola (see graphic).

The water must be clean in order to transport light via the water jet. The target point can only be illuminated by the parabola if the water is clear.

45° Parabola		JumpingJet Rainbow Star II /DMX/02		
Fountain width		DWB [l/min]	DDB [bar]	Fountain height [m]
1.5	[m]	16	0.10	0.68
2.0	[m]	20	0.12	0.81
3.0	[m]	24	0.17	1.04
4.0	[m]	28	0.22	1.28
Order no.				34137

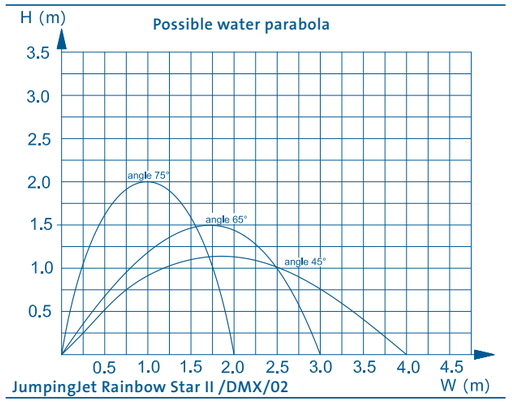

JumpingJet Rainbow Star II /DMX/02

Accessories (must be ordered separately)

Aquarius Universal Premium 5000 (see page 134)	56617
Installation kit JumpingJet Rainbow Star (see page 259)	51058
Underwater power supply 250 / 24 V /01 (see page 202)	50733
Connecting cable DMX /01 (see page 194)	**Order no.**
Connecting cable DMX / 1.0 m /01	12368
Connecting cable DMX / 1.5 m /01	49628
Connecting cable DMX / 3.0 m /01	12369
Connecting cable DMX / 5.0 m /01	12371
Connecting cable DMX / 10.0 m /01	12372
Connecting cable DMX / 20.0 m /01	12373
End resistant for BUS-system DMX/01	12007
DMX-Box /01	57646
Connecting cable 24 V DC /01 (see page 192)	**Order no.**
Connecting cable 24 V DC / 1.0 m /01	12762
Connecting cable 24 V DC / 1.5 m /01	49629
Connecting cable 24 V DC / 3.0 m /01	12552
Connecting cable 24 V DC / 7.5 m /01	12553
Connecting cable 24 V DC / 15.0 m /01	11720
PowerBox 24 V DC /01 (see page 192)	50493
WECS II 512 /DMX/02 (see page 206)	56491
WECS II 1024 /DMX/02 (see page 206)	56492
WECS II 2048 /DMX/02 (see page 212)	56507

JumpingJet Rainbow Star II /DMX/02		
Dimensions (L x B x H)	[mm]	478 x 305 x 555
Light type		LED RBGW multiple spotlights
Rated voltage	[V/DC]	24
Power consumption	[W]	20
Energy efficiency class of light fixture		A
Weighted energy consumption per light fixture	[kWh/1000h]	10
Jet diameter	[mm]	12
Min. water depth	[mm]	200
Max. water depth	[mm]	300
Vertical pivoting range	[°]	45 - 90
DMX/RDM connection		1
Material		Plastic / stainless steel 1.4301 (AISI 304)
Weight	[kg]	11
Order no.		34137

	Fresh Water	Pool Water	Sea Water	220-240 V	400 V	110-120 V	50 Hz	60 Hz	12 V AC	24 V DC	DMX	DMX/ RDM	Plug and Spray
JumpingJet Rainbow Flash III /DMX/02	●	●	●*	○	○	○	○	○	○	●	●	●	●

*Seawater product version on request

JumpingJet Rainbow Flash III /DMX/02

JumpingJet Rainbow Flash III /DMX/02, an impressive water-light effect; crystal-clear, laser-like water jets shoot in wide arcs through the air. The cut off function enables the 18 mm water jet to be cut individually into short sections. The ring illumination on the stainless steel case with its multi-coloured light spectrum draws special attention at night.

The JumpingJet is now equipped with 24 V DC technology, thus integrating ideally into the OASE 24 V DC system. The JumpingJet Rainbow Flash III /DMX/02 is DMX/RDM compatible and suitable for remote maintenance with the corresponding controller. The colour of the integrated RGBW LED light and the length of the water jet can be freely selected and controlled. Through the use of controllable pumps additional dynamic parabolic widths and heights can be generated.

Product characteristics at a glance

- Jet diameter 18 mm
- Can be used indoors and outdoors
- Surprising water features, dynamic parabola possible
- Precise, crystal clear, laminar water jet
- Integrated illumination effects with strong RGBW-LED light
- 24 V DC technology
- Cut off function
- DMX/RDM capable (combined with WECS)
- Vibration-free, quiet operation
- Extremely stable - with or without floor anchoring
- Compact stainless steel design
- Ring Illumination as an additional effect
- Maintenance – optimized design
- Long service life
- Seawater product version on request

PATENTED

NEW

JumpingJet Rainbow Flash III /DMX/02

JumpingJet Rainbow Flash III /DMX/02

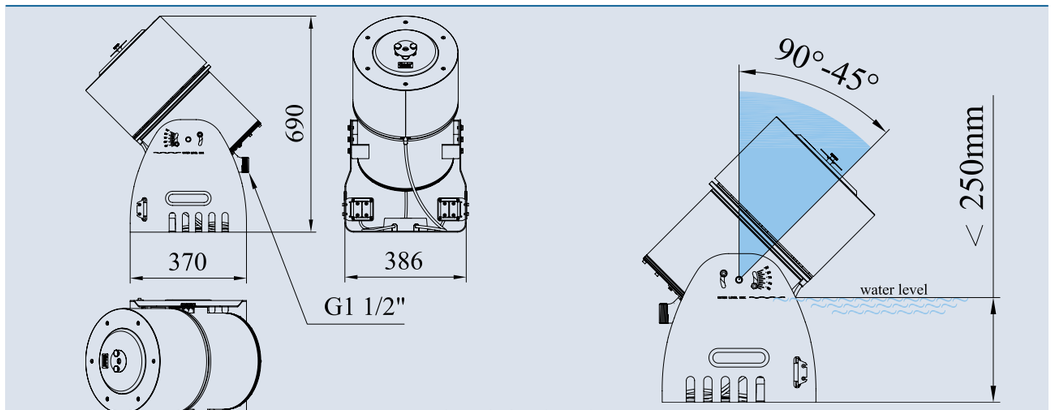

JumpingJet Rainbow Flash III /DMX/02

Technical note

When operating the JumpingJet Rainbow Flash, water can splash, particularly with water jets that are shot quickly in succession; the amount is approx. 2 litre per hour. The amount of splash water is negligible if the water jet is operated as a full, continuous parabola.

45° Parabola		JumpingJet Rainbow Flash III /DMX/02		
Fountain width		DWB [l/min]	DDB [bar]	Fountain height [m]
1.5	[m]	30	0.019	0.30
2.0	[m]	40	0.020	0.50
3.0	[m]	50	0.065	0.85
4.0	[m]	60	0.115	1.00
5.0	[m]	67	0.165	1.35
6.0	[m]	76	0.210	1.60
Order no.				34138

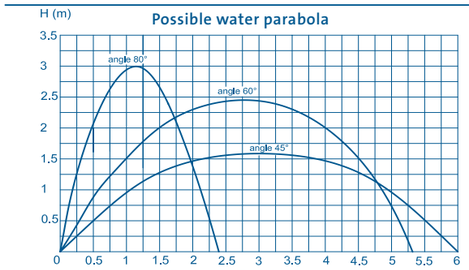

JumpingJet Rainbow Flash III /DMX/02

The water must be clean in order to transport light via the water jet. The target point can only be illuminated by the parabola (see graphic on) if the water is clear.

Accessories (must be ordered separately)

ASM water stabilizer JumpingJet Flash	47736
Connecting cable DMX /01 (see page 194)	**Order no.**
Connecting cable DMX / 1.0 m /01	12368
Connecting cable DMX / 1.5 m /01	49628
Connecting cable DMX / 3.0 m /01	12369
Connecting cable DMX / 5.0 m /01	12371
Connecting cable DMX / 10.0 m /01	12372
Connecting cable DMX / 20.0 m /01	12373
End resistant for BUS-system DMX/01	12007
DMX-Box /01	57646
Connecting cable 24 V DC /01 (see page 192)	**Order no.**
Connecting cable 24 V DC / 1.0 m /01	12762
Connecting cable 24 V DC / 1.5 m /01	49629
Connecting cable 24 V DC / 3.0 m /01	12552
Connecting cable 24 V DC / 7.5 m /01	12553
Connecting cable 24 V DC / 15.0 m /01	11720
PowerBox 24 V DC /01 (see page 192)	50493
Underwater power supply 250 / 24 V /01 (see page 202)	50733
WECS II 512 /DMX/02 (see page 206)	56491
WECS II 1024 /DMX/02 (see page 206)	56492
WECS II 2048 /DMX/02 (see page 212)	56507

JumpingJet Rainbow Flash III /DMX/02		
Dimensions (length/width/height)(45°)	[mm]	560 x 386 x 690
Light type		LED RGBW multible spotlight
Rated voltage	[V/DC]	24
Total consumption	[W]	20
Energy efficiency class of light fixture		A
Weighted energy consumption per light fixture	[kWh/1000h]	10
Jet diameter	[mm]	18
Max. water parabola laminar with light	[m]	6
Max. pressure	[bar]	0.3
Max. water depth	[mm]	250
Vertical pivoting range	[°]	45 - 90
Pressure side connection	[inch]	Hose connection 1 ½
Power Connection		1 box
DMX/RDM connection		1 box
Number of DMX channels		8 channels, start number 1
Material		Stainless steel 1.4301 (AISI 304)
Weight	[kg]	39.2
Environmental condition: submersible application	[°C]	Water temperature: min 4°C to max. 35°C
Environmental condition: dry application	[°C]	Ambient temperature: max. 30°C with natural convection, max. 40 with forced convection, no direct sun exposure permitted
Order no.		34138

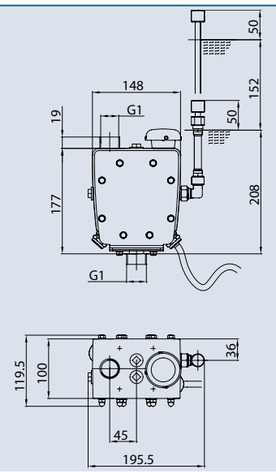

VarioSwitch
010a / 24 V

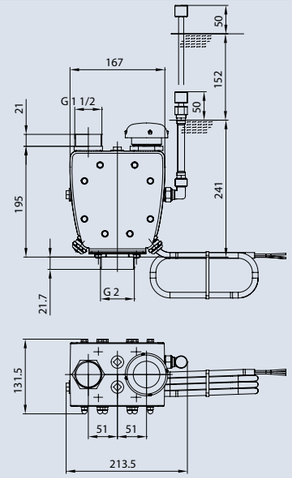

VarioSwitch
015a / 24 V

	Fresh Water	Pool Water	Sea Water	220-240 V	400 V	110-120 V	50 Hz	60 Hz	12 V AC	24 V DC	DMX	DMX/ RDM	Plug and Spray
VarioSwitch	●	○	○	○	○	○	○	○	○	●	○	○	○

VarioSwitch

Product characteristics at a glance

- Dynamically variable water effect for musical fountains or interactive water effects
- Effect switchover is executed with virtually no pressure loss
- Power-saving electrical valve technology
- Stable construction and stainless steel side pieces
- Three-core connection cable
- Low maintenance in good water conditions
- No-maintenance membrane valves

VarioSwitch 010a / 24 V VarioSwitch 015a / 24 V

In musical fountains or other fountain installations with dynamic elements water becomes lively with help from VarioSwitch systems.

This water switch is combined with a suitable nozzle and switches between two outputs – similar to a 3/2-way valve – almost without pressure loss and without water hammer effects in the lines. Normally one of those outputs is used as a pure bypass, however a second nozzle can also be mounted.
The air for alternately switching (e.g. atmospheric pressure on and off) is supplied via the telescopic tube. Switchover time is flow dependent and cycles of 0.1 s are achievable.
Please note: the operational range of the device is limited by the min. and max. flow rate als shown below.

Accessories (must be ordered separately)

	Order no.
Comet 10 - 12 T (see page 68)	50968
Comet 10 - 14 T (see page 68)	50969
Comet 15 - 17 T (see page 68)	50970
Comet 10 - 12 Silver (see page 66)	45454
Comet 10 - 14 Silver (see page 66)	50723
Comet 15 - 17 Silver (see page 66)	50724
Schaumsprudler 35 - 10 E (see page 90)	50984
Schaumsprudler 55 - 15 E (see page 90)	50987

Accessories (must be ordered separately)

Underwater Switch 24 V DC /DMX/02 (see page 200)	56411
Connecting cable DMX /01 (see page 194)	**Order no.**
Connecting cable DMX / 1.0 m /01	12368
Connecting cable DMX / 1.5 m /01	49628
Connecting cable DMX / 3.0 m /01	12369
Connecting cable DMX / 5.0 m /01	12371
Connecting cable DMX / 10.0 m /01	12372
Connecting cable DMX / 20.0 m /01	12373
End resistant for BUS-system DMX/01	12007
DMX-Box /01	57646
Connecting cable 24 V DC /01 (see page 192)	**Order no.**
Connecting cable 24 V DC / 1.0 m /01	12762
Connecting cable 24 V DC / 1.5 m /01	49629
Connecting cable 24 V DC / 3.0 m /01	12552
Connecting cable 24 V DC / 7.5 m /01	12553
Connecting cable 24 V DC / 15.0 m /01	11720
WECS II 512 /DMX/02 (see page 206)	56491
WECS II 1024 /DMX/02 (see page 206)	56492
WECS II 2048 /DMX/02 (see page 212)	56507

Water flow and pressure requirements of the VarioSwitch with different nozzles

Model		VarioSwitch 010a / 24 V						VarioSwitch 015a / 24 V			
Nozzle		Comet 10 - 12 T		Comet 10 - 14 T		Schaumsprudler 35 - 10 E		Comet 15 - 17 T		Schaumsprudler 55 - 15 E	
Fountain height		DDB	DWB	DDB	DWB	DDB	DWB	DWB	DDB	DDB	DWB
		[bar]	[l/min]	[bar]	[l/min]	[bar]	[l/min]	[bar]	[l/min]	[bar]	[l/min]
0.50	[m]	0.21	27	0.25	31	0.42	38	0.16	100	0.50	158
1.00	[m]	0.35	37	0.46	40	0.72	49	0.22	123	0.92	209
1.50	[m]	0.60	46	0.66	48	0.98	57	0.32	137	1.42	255
2.00	[m]	0.72	50	0.86	55	1.22	63	0.42	154	1.92	291
2.50	[m]	0.86	55	1.06	61	1.52	70	0.52	168	2.48	322
3.00	[m]	1.02	60	1.32	67	1.80	76	0.62	181	2.80	343
3.50	[m]	1.22	65	1.55	73	2.10	81	0.72	192		
4.00	[m]	1.38	70	1.82	79			0.82	202		
4.50	[m]	1.64	75	1.96	82			0.92	214		
5.00	[m]	1.82	80	2.18	87			1.02	218		
5.50	[m]	2.10	85	3.00	96			1.12	230		

VarioSwitch		010a / 24 V	015a / 24 V
Dimensions (LxWxH)	[mm]	150 x 120 x 210	170 x 130 x 240
Nominal voltage	[V/DC]	24	24
Power consumption	[W]	2 x 8	2 x 8
Flow rate min.	[l/min]	35.0	85.0
Flow rate max.	[l/min]	95.0	325.0
Pressure min.	[bar]	0.1	0.2
Pressure max.	[bar]	3.4	3.0
Protection class		IP 58	IP 58
Strainer	[ø mm]	2	2
Material		Plastic / stainless steel 1.4301 (AISI 304)	Plastic / stainless steel 1.4301 (AISI 304)
Weight	[kg]	5.2	6.7
Cable length	[m]	2.0	2.0
Order no.		57472	57435

Customized version

	Fresh Water	Pool Water	Sea Water	220-240 V	400 V	110-120 V	50 Hz	60 Hz	12 V AC	24 V DC	DMX	DMX/ RDM	Plug and Spray
Swivel 24 V /DMX/02	●	●	●*	○	○	○	○	○	○	●	●	●	●

*Seawater product version on request

Swivel 24 V /DMX/02

The swivel creates swivelling and impressive water effects.

These water effects are formed by combining this single dimensional drive with a pivoting range of max. 180° on the Y-axis and nozzles (Comet Prec 20 - 20 E or Finger nozzle 7 - 15 E).

Swivel 24 V /DMX/02

Product characteristics at a glance

- Single dimensional drive, suitable for e.g. Comet Prec 20 - 20 E or Finger nozzle 7 - 15 E
- Pivoting range of max. 180°
- G 2"- internal thread connection for nozzle, ø 75 mm hose connection
- Robust stainless steel construction
- Controllable by OASE DMX devices (not included in scope of delivery)
- Energy efficient motor, 24 V DC
- Suitable for fresh water and pool water application.
- Seawater Swivel on request.

Swivel 24 V /DMX/02	
DWB [l/min]	DDB [bar]
150	0.01
200	0.02
250	0.03
300	0.04
400	0.05
500	0.07
600	0.1
700	0.16
800	0.21

Accessories (must be ordered separately)

Finger nozzle 7 - 15 E (see page 86)	51110
Comet Prec 20 - 20 Silver (see page 70)	50523
LED Modul MDD L 2D /DMX/02 (see page 180)	70977
Underwater power supply 250 / 24 V /01 (see page 202)	50733
Connecting cable DMX /01 (see page 194)	**Order no.**
Connecting cable DMX / 1.0 m /01	12368
Connecting cable DMX / 1.5 m /01	49628
Connecting cable DMX / 3.0 m /01	12369
Connecting cable DMX / 5.0 m /01	12371
Connecting cable DMX / 10.0 m /01	12372
Connecting cable DMX / 20.0 m /01	12373
End resistant for BUS-system DMX/01	12007
DMX-Box /01	57646
Connecting cable 24 V DC /01 (see pags 192)	**Order no.**
Connecting cable 24 V DC / 1.0 m /01	12762
Connecting cable 24 V DC / 1.5 m /01	49629
Connecting cable 24 V DC / 3.0 m /01	12552
Connecting cable 24 V DC / 7.5 m /01	12553
Connecting cable 24 V DC / 15.0 m /01	11720
PowerBox 24 V DC /01 (see pags 192)	50493
WECS II 512 /DMX/02 (see page 206)	56491
WECS II 1024 /DMX/02 (see page 206)	56492
WECS II 2048 /DMX/02 (see page 212)	56507

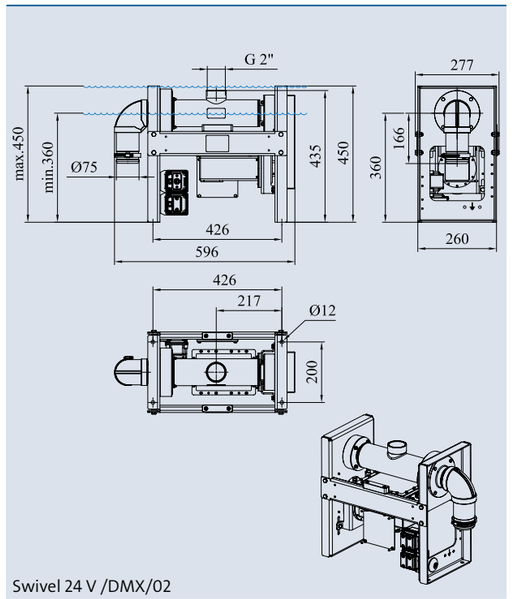

Swivel 24 V /DMX/02

Swivel 24 V /DMX/02		
Dimensions (L x W x H)	[mm]	596 x 277 x 450
Nominal voltage	[V/DC]	24
Power consumption	[W]	26.4
Nominal current	[A]	1.1
Max. operation pressure	[bar]	2.5
Protection class		IP 68
Power connection		with box
DMX/RDM connection		with box
Material		Stainless steel 1.4301 (AISI 304)
Weight	[kg]	32
Order no.		50342

	Fresh Water	Pool Water	Sea Water	220-240 V	400 V	110-120 V	50 Hz	60 Hz	12 V AC	24 V DC	DMX	DMX/ RDM	Plug and Spray
Multi Directional Drive L 2D /DMX/02	●	●	●	○	○	○	○	○	○	●	●	●	●

Multi Directional Drive L 2D /DMX/02

Individual swiveling fountains up to 20 m high: The Multi Directional Drive L 2D /DMX/02 is a swivel drive with two axes and fascinate with phenomenal, dynamic water effects with fountain heights of up to 20 m.

With a pivoting range of max. 200° on the X-axis and max. 140° on the Y-axis, the Multi Directional Drive L (MDD L 2D) is almost unlimited in its movement. This enables the creation of impressive water effects. A Fountain height of up to 20 m can even be achieved with the Comet Prec 20 - 20 nozzle.

NEW

Multi Directional Drive L 2D /DMX/02

The MDD L 2D can tilt the nozzle (Comet Prec 20 - 20) to a parking position. It can be completely hidden below the water surface at a water level of 650 mm. Due to the modified design, the MDD L 2D is maintenance-optimized and the setting of the nozzle position is more precise.

Product characteristics at a glance

- **Pivoting range: Max. 200° on the X-axis and max. 140° on the Y-axis,**
- **Min. Water height of 450 mm, max. water height of 650 mm**
- **Default setting 140° on the X-axis, 140° on the Y-axis**
- **Park position. The drive can be pivoted completely under the water surface at a water level of 850 mm**
- **Multi Directional Drive L is suitable for Comet Prec 20 - 20 for 20 m fountain height**
- **G 2"- female thread for nozzle connection, DN 65 connection pressure line**
- **Robust design in stainless steel**
- **Suitable for operation in fresh water, pool water and sea water**
- **Controllable with a OASE DMX/RDM controller (WECS II) (not included in scope of delivery)**
- **Energy efficient 24 V DC motor**
- **Optimized for maintenance**

		Comet Prec 20 - 20 Silver		MDD L 2D	Comet Prec 20 - 20 S on MDD	
Fountain height		DWB	DDB	DDB	DWB	DDB
		[l/min]	[bar]	[bar]	[l/min]	[bar]
1.00	[m]	90	0.12	0.02	90	0.14
1.50	[m]	102	0.17	0.05	102	0.22
2.00	[m]	117	0.22	0.08	117	0.30
4.00	[m]	170	0.46	0.12	170	0.58
6.00	[m]	227	0.69	0.15	227	0.84
8.00	[m]	263	0.92	0.18	263	1.10
10.00	[m]	295	1.16	0.20	295	1.36
12.00	[m]	323	1.40	0.23	323	1.63
16.00	[m]	385	1.90	0.30	385	2.20
20.00	[m]	441	2.40	0.40	441	2.80
Material		Stainless steel 1.4571/1.4301 (AISI 316Ti/304)		Stainless steel 1.4571 (AISI 316Ti)	Stainless steel 1.4571/1.4301 (AISI 316Ti/304)	
Order no.		50523		34318	50523 + 34318	

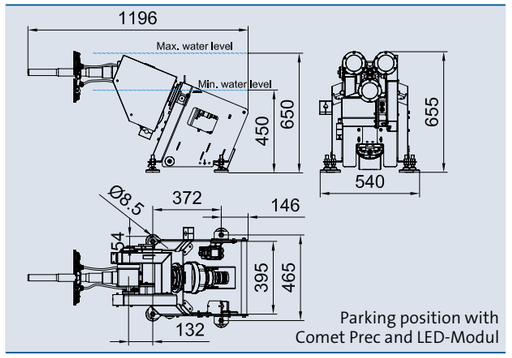

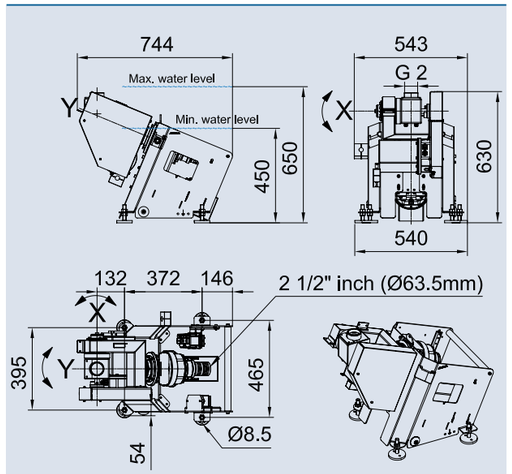

Multi Directional Drive L 2D /DMX/02

Accessories (must be ordered separately)

Comet Prec 20 - 20 Silver (see page 70)	50523
LED Modul MDD L 2D /DMX/02 (see page 180)	70977
QuickFix MDD L	70430
Connecting cable DMX /01 (see page 194)	**Order no.**
Connecting cable DMX / 1.0 m /01	12368
Connecting cable DMX / 1.5 m /01	49628
Connecting cable DMX / 3.0 m /01	12369
Connecting cable DMX / 5.0 m /01	12371
Connecting cable DMX / 10.0 m /01	12372
Connecting cable DMX / 20.0 m /01	12373
End resistant for BUS-system DMX/01	12007
DMX-Box /01	57646
Connecting cable 24 V DC /01 (see page 192)	**Order no.**
Connecting cable 24 V DC / 1.0 m /01	12762
Connecting cable 24 V DC / 1.5 m /01	49629
Connecting cable 24 V DC / 3.0 m /01	12552
Connecting cable 24 V DC / 7.5 m /01	12553
Connecting cable 24 V DC / 15.0 m /01	11720
PowerBox 24 V DC /01 (see page 192)	50493
WECS II 512 /DMX/02 (see page 206)	56491
WECS II 1024 /DMX/02 (see page 206)	56492
WECS II 2048 /DMX/02 (see page 212)	56507

Multi Directional Drive L 2D /DMX/02		
Dimensions (L x W x H)	[mm]	744 x 543 x 630
Rated voltage	[V/DC]	24
Max. power consumption	[W]	53
Max. current consuption	[A]	2.2
Power connection		with box
DMX/RDM-connection		with box
Min. water depth	[mm]	450
Max. water depth	[mm]	650
Pivoting range, delivery state X/Y-axis	[°]	140/140
Pivoting range, freely adjustable X/Y-axis	[°]	200/140
Max. pivoting speed	[°/s]	72
Connection for Nozzle	[inch]	G 1 ½ internal thread
Connection pressure line	[inch/mm]	2 ½/63.5
Protection typet		IP 68
Max. pressuer	[bar]	3.5
Material		Stainless steel 1.4571 (AISI 316Ti)
Weight	[kg]	62.8
Order no.		34318

	Fresh Water	Pool Water	Sea Water	220-240 V	400 V	110-120 V	50 Hz	60 Hz	12 V AC	24 V DC	DMX	DMX/ RDM	Plug and Spray
Multi Directional Drive XL 2D /DMX/02	●	●	●	○	○	○	○	○	○	●	●	●	●

Multi Directional Drive XL 2D /DMX/02

Individually controllable at unprecedented heights: The Multi Directional Drive XL 2D /DMX/02 is OASE's largest two dimensional drive and impresses with phenomenal and dynamic water effects at a fountain height of up to 30 m.

With a pivoting range of up to 180° on the X-axis and up to 165° on the Y-axis, the Multi Directional Drive XL (MDD XL 2D) is almost unlimited in its movement. This enables the creation of impressive water effects. A fountain height of up to 30 m can even be achieved with the Comet Prec 30 - 30 nozzle.

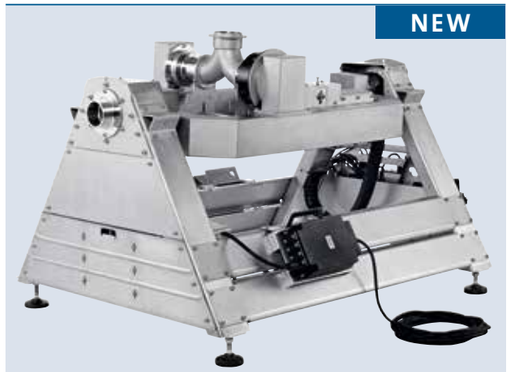

Multi Directional Drive XL 2D /DMX/02

The innovative design of the MDD XL 2D enables the nozzle (Comet Prec 30 - 30) to be turned and folded back to its park / default position. The technology can be hidden completely under water at a water level of 850 mm. The maximum pivoting range at this level is 150° on both the X and Y axes.

Product characteristics at a glance

- **Pivoting Range: Max 180° on the X-axis and 165° on the Y-axis at a water level of 650 mm. The default setting is 150° on both X and Y axes at a water level of 850 mm.**
- **Park Position: The nozzle can be hidden completely below the water surface at a water level of 850 mm with a pivoting range of 150° on both X and Y axes.**
- **Suitable for Comet Prec 30 - 30 for fountain height of 30 m.**
- **Supplied with 3 x pre-assembled Underwater power supply 250 24 V /01 (50733)**
- **G 3"- internal thread nozzle , 2 x G 3" external thread pressure pipe**
- **Robust design in stainless steel**
- **Suitable for operation in fresh water, pool water and sea water**
- **Controllable with a OASE DMX/RDM controller (WECS II) (not included in scope of delivery)**
- **Energy efficient motor , 24 VDC**

		Comet Prec 30 - 30		MDD XL 2D	Comet Prec 30 - 30 on MDD XL 2D	
Fountain height		DWB	DDB	DDB	DWB	DDB
		[l/min]	[bar]	[bar]	[l/min]	[bar]
5.0	[m]	456	0.67	0.07	456	0.74
10.0	[m]	646	1.31	0.14	646	1.45
15.0	[m]	806	1.95	0.18	806	2.13
20.0	[m]	922	2.53	0.24	922	2.77
25.0	[m]	1045	3.30	0.35	1045	3.65
30.0	[m]	1195	4.30	0.40	1195	4.70
Material		Plastic/Stainless steel		Stainless steel 1.4571 (AISI 316Ti)	Plastic/Stainless steel 1.4571 (AISI 316Ti)	
Order no.		45079		45076	45079 + 45076	

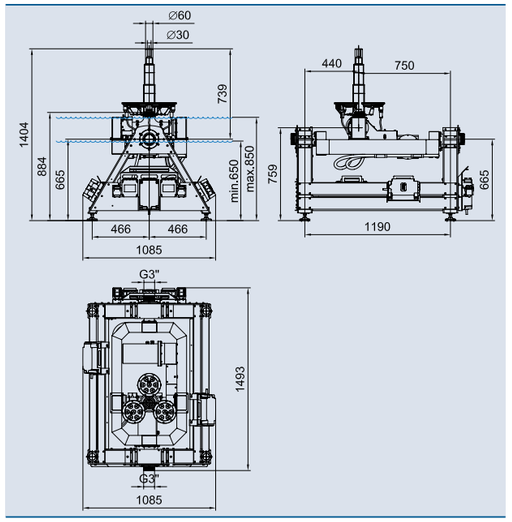

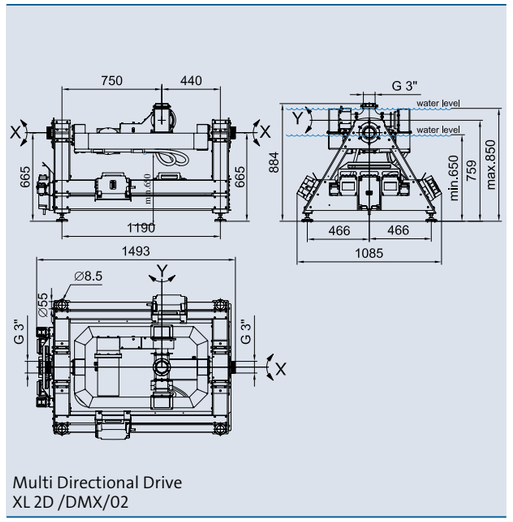

Multi Directional Drive
XL 2D /DMX/02

Accessories (must be ordered separately)

Comet Prec 30 - 30 silver (see page 71)	45079
LED Modul MDD XL 2D /DMX/02 (see page 182)	45077
Connecting cable DMX /01 (see page 194)	**Order no.**
Connecting cable DMX / 1.0 m /01	12368
Connecting cable DMX / 1.5 m /01	49628
Connecting cable DMX / 3.0 m /01	12369
Connecting cable DMX / 5.0 m /01	12371
Connecting cable DMX / 10.0 m /01	12372
Connecting cable DMX / 20.0 m /01	12373
End resistant for BUS-system DMX/01	12007
DMX-Box /01	57646
Connecting cable 24 V DC /01 (see page 192)	**Order no.**
Connecting cable 24 V DC / 1.0 m /01	12762
Connecting cable 24 V DC / 1.5 m /01	49629
Connecting cable 24 V DC / 3.0 m /01	12552
Connecting cable 24 V DC / 7.5 m /01	12553
Connecting cable 24 V DC / 15.0 m /01	11720
PowerBox 24 V DC /01 (see page 192)	50493
WECS II 512 /DMX/02 (see page 206)	56491
WECS II 1024 /DMX/02 (see page 206)	56492
WECS II 2048 /DMX/02 (see page 212)	56507

Multi Directional Drive XL 2D /DMX/02			
Dimensions (L x W x H)		[mm]	1493 x 1085 x 884
Electrical Connection (primary)	Rated voltage	[V AC]	230
	Rated frequency	[Hz]	50/60
	Max. power consumption	[W]	750
Device connection (secondary)	Rated voltage	[V/DC]	24
	Max- current consumption	[A]	27
Power			3 x Unterwater power supply (50733)
Length of power connection cable		[m]	3 x 10
DMX/RDM-connection			with Box
Water depth for park position		[mm]	850
Min. water depth		[mm]	650
Max. immersion depth		[m]	1
Pivoting range, delivery state X/Y-axis		[°]	150/150
Pivoting range, freely adjustable X/Y-axis		[°]	180/165
Max. pivoting speed		[°/s]	60
Connection for nozzle		[inch]	G 3 internal thread
Connection pressure line		[inch]	2 x G 3 external thread
Protection type			IP 68
Max. pressure		[bar]	5
Material			Stainless steel 1.4571 (AISI 316Ti)
Weight		[kg]	212
Order no.			45076

Nozzles
Controllable

	Fresh Water	Pool Water	Sea Water	220-240 V	400 V	110-120 V	50 Hz	60 Hz	12 V AC	24 V DC	DMX	DMX/ RDM	Plug and Spray
Multi Directional Drive L 3D /DMX/02	●	●	●	○	○	○	○	○	○	●	●	●	●

Multi Directional Drive L 3D /DMX/02

Multi-dimensional pivoting and rotation wonder: The Multi Directional Drive L 3D /DMX/02 consist of two pivoting drivers and one endless rotating axis. New breathtaking water effects can be generated by controlling the three axes individually.

The pivoting range is max. 200° on the X-axis and max. 140° on the Y-axis. The endless rotation of the 360° Z-axis (2 rotation per second) can be individually positioned in any direction.
The Multi Directional Drive L 3D /DMX/02 (MDD L 3D) can drive synchronous orbits or spirals. The nozzle [Fan nozzle 15 - 8 E (53047) or Finger nozzle 7 - 15 E (51110)] can be completely hidden below the water surface at a water level of 650 mm. Due to the modified design, the MDD L 3D is maintenance-optimized and the setting of the nozzle position is more precise.

NEW

Multi Directional Drive L 3D/DMX/02

Product characteristics at a glance

- **Pivoting range: Max. 200° on the X-axis and max. 140° on the Y-axis, Z-axis 360° endless rotation in both directions individually controllable, 720°/s**
- **Min. water height of 450 mm, max. water height of 650 mm**
- **Default setting: 140° on the X-axis, 140° on the Y-axis**
- **Park position: The nozzle can be pivoted completely below the water surface at a water level of 650 mm**
- **Suitable for Fan nozzle 15 - 8 E (53047) or Finger nozzle 7 - 15 E (51110)**
- **G 1 ½" female thread for connection nozzle, DN 65 connection pressure line**
- **Robust design in stainless steel**
- **Suitable for operation in fresh water, pool water and sea water**
- **Controllable with a OASE DMX/RDM controller (WECS II) (not included in scope of delivery)**
- **Energy efficient 24 V DC motor**
- **Optimized for maintenance**

		Finger nozzle 7 - 15 E		Fan Jet 15 - 8		MDD L 3D		Finger nozzle 7 - 15 E on MDD L 3D		Fan Jet 15 - 8 E on MDD L 3D	
Fountain height		DWB	DDB	DWB	DDB	DWB	DDB	DWB	DDB	DWB	DDB
		[l/min]	[bar]	[l/min]	[bar]	[l/min]	[bar]	[l/min]	[bar]	[l/min]	[bar]
1.00	[m]	150	0.10	200	0.11	150	0.11	150	0.21	200	0.48
1.50	[m]	200	0.21	244	0.17	200	0.16	200	0.37	244	0.72
2.00	[m]	250	0.35	282	0.25	250	0.21	250	0.56	282	0.96
4.00	[m]	300	0.48	517	0.65	300	0.28	300	0.76	517	1.28
5.00	[m]	–	–	750	1.33	400	0.46	–	–	750	2.63
						500	0.61				
						600	0.92				
						700	1.17				
						800	1.42				
Material		Stainless steel 1.4404 (AISI 316L)		Stainless steel 1.4301 (AISI 304)		Stainless steel 1.4571 (AISI 316Ti)		Stainless steel 1,4571/1,4404 (AISI 316Ti/316L)		Stainless steel 1,4571/1,4301 (AISI 316Ti/304)	
Order no.		51110		53047		34322		51110 + 34322		53047 + 34322	

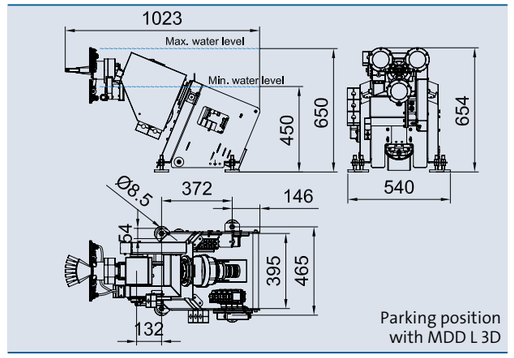

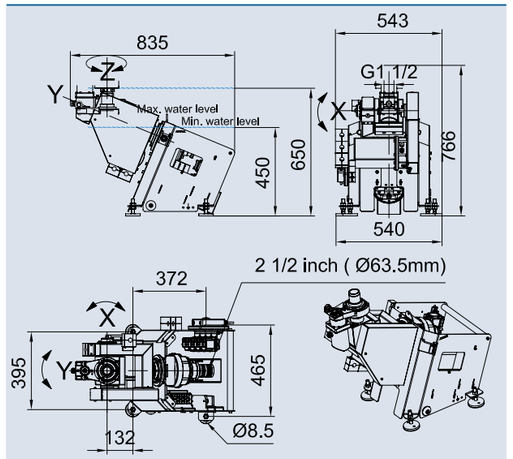

Multi Directional Drive L 3D /DMX/02

Accessories (must be ordered separately)

Finger nozzle 7 - 15 E (see page 86)	51110
Fan Jet 15 - 8 E (see page 80)	53047
LED Modul MDD L 3D /DMX/02 (see page 180)	70975
QuickFix MDD L	70430
Connecting cable DMX /01 (see page 194)	**Order no.**
Connecting cable DMX / 1.0 m /01	12368
Connecting cable DMX / 1.5 m /01	49628
Connecting cable DMX / 3.0 m /01	12369
Connecting cable DMX / 5.0 m /01	12371
Connecting cable DMX / 10.0 m /01	12372
Connecting cable DMX / 20.0 m /01	12373
End resistant for BUS-system DMX/01	12007
DMX-Box /01	57646
Connecting cable 24 V DC /01 (see page 192)	**Order no.**
Connecting cable 24 V DC / 1.0 m /01	12762
Connecting cable 24 V DC / 1.5 m /01	49629
Connecting cable 24 V DC / 3.0 m /01	12552
Connecting cable 24 V DC / 7.5 m /01	12553
Connecting cable 24 V DC / 15.0 m /01	11720
PowerBox 24 V DC /01 (see page 192)	50493
WECS II 512 /DMX/02 (see page 206)	56491
WECS II 1024 /DMX/02 (see page 206)	56492
WECS II 2048 /DMX/02 (see page 212)	56507

Multi Directional Drive L 3D /DMX/02		
Dimensons (LxBxH)	[mm]	835 x 543 x 766
Rated voltage	[V/DC]	24
Power consumption	[W]	79.2
Current consumption	[A]	3.3
Power connection		with box
DMX/RDM-connection		with box
Min. water depth	[mm]	450
Max. water depth	[mm]	650
Pivoting range, delivery state X-/Y-axis	[°]	140/140
Pivoting range, freely adjustable X-/Y-axis	[°]	200/140
Max. Rotation speed	[°/s]	720
Max. pivoting speed	[°/s]	67
Connection for Nozzle	[inch]	G 1 ½ internal thread
Connection pressure line	[inch/mm]	2 ½/63.5
Protection typet		IP 68
Max. pressure	[bar]	3.5
Material		Stainless steel 1.4571 (AISI 316Ti)
Weight	[kg]	72.1
Order no.		34322

	Fresh Water	Pool Water	Sea Water	220-240 V	400 V	110-120 V	50 Hz	60 Hz	12 V AC	24 V DC	DMX	DMX/ RDM	Plug and Spray
Multi Directional Drive XL 3D /DMX/02	●	●	●	○	○	○	○	○	○	●	●	●	●

Multi Directional Drive XL 3D /DMX/02

Multidimensional rotation wonder with video and laser Projection possibility: The Multi Directional Drive XL 3D /DMX/02 is OASE's largest three-dimensional swivel drive with a rotating axis. It impresses with phenomenal and dynamic water effects.

In combination with the nozzle Fan Jet 30 - 11 E, the Multi Directional Drive XL 3D /DMX/02 forms gigantic water fans, which could be used statically as an approximately 31m² large screen for breathtaking laser and projection shows.
With a pivoting range of up to 180° on the X-axis and up to 165° on the Y-axis, plus an endless rotation of the 360° Z-axis (one rotation per second) the Multi Directional Drive XL 3D (MDD XL 3D) is unlimited in its movement. This enables the creation of impressive water effects. A fountain height of up to 9 m can even be achieved with the Fan Jet 30 - 11 E nozzle.
The innovative design of the MDD XL 3D enables the nozzle (Fan Jet 30 - 11 E) to be turned and folded back to its park / default position - thus hiding it completely under water at a water level of 850 mm. The maximum pivoting range at this level is 150° on both the X and Y axes.

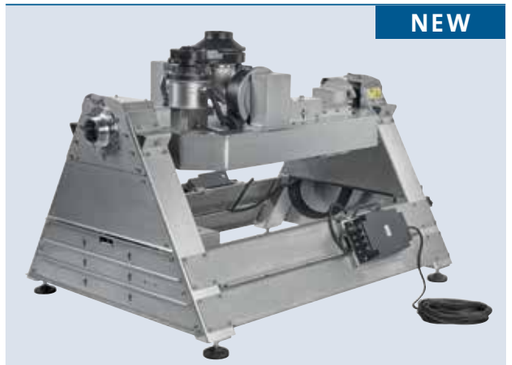

Multi Directional Drive XL 3D /DMX/02

Product characteristics at a glance

- **Pivoting Range: Max 180° on the X-axis and 165° on the Y-axis at a water level of 650 mm. The default setting is 150° on both X and Y axes at a water level of 850 mm.**
- **Park Position: The drive can be hidden completely below the water surface at a water level of 850 mm with a pivoting range of 150° on both X and Y axes.**
- **Z-axis 360° endless rotation in both directions, individually controllable, 360°/s**
- **Suitable for different nozzle patterns, able to achieve a fountain height of 9 m with the Fan Jet 30 - 11 E.**
- **Supplied with 3 x pre-assembled Underwater power supply 250 24V/01 (50733)**
- **G 3"- internal thread nozzle, Ø 75 (2 x G 3" external thread pressure pipe)**
- **Robust design in stainless steel**
- **Suitable for operation in fresh water, pool water and sea water**
- **Controllable with a OASE DMX/RDM controller (WECS II) (not included in scope of delivery)**
- **Energy efficient motor, 24 VDC**

		Fan Jet 30 - 11 E			MDD XL 3D	Fan Jet 30 - 11 E on MDD XL 3D	
Fountain height		DWB	SPB	DDB	DDB	DWB	DDB
		[l/min]	[m]	[bar]	[bar]	[l/min]	[bar]
1.0	[m]	404	2.40	0.14	0.06	404	0.20
2.0	[m]	611	4.00	0.22	0.12	611	0.34
3.0	[m]	827	7.80	0.38	0.19	827	0.57
4.0	[m]	1015	14.00	0.55	0.30	1015	0.85
5.0	[m]	1128	17.00	0.63	0.36	1128	0.99
6.0	[m]	1316	19.00	0.85	0.49	1316	1.34
7.0	[m]	1457	22.60	1.00	0.59	1457	1.59
8.0	[m]	1589	26.00	1.15	0.71	1589	1.86
9.0	[m]	1748	27.60	1.35	0.86	1748	2.21
Material		Stainless steel 1.4571 (AISI 316Ti)			Stainless steel 1.4571 (AISI 316Ti)	Stainless steel 1.4571 (AISI 316Ti)	
Order no.				**46983**	**46982**		**46983 + 46982**

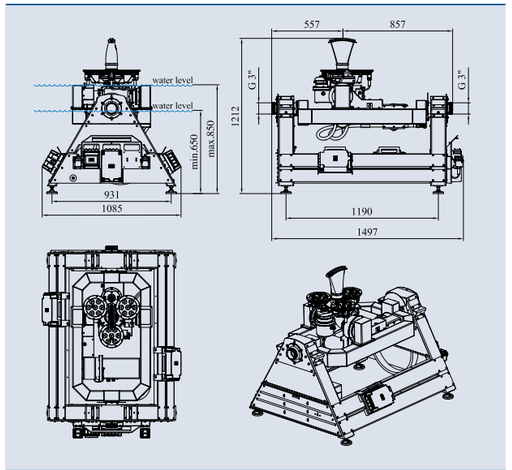

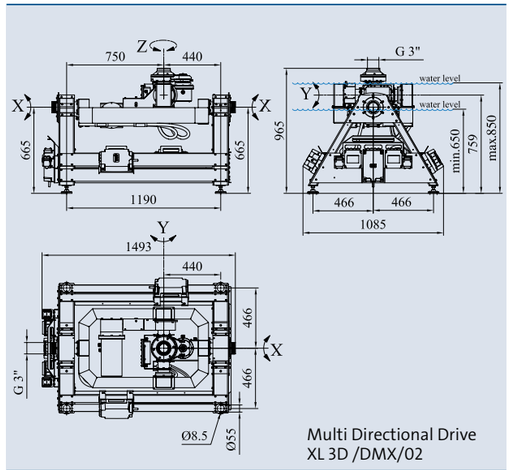

Multi Directional Drive XL 3D /DMX/02

Accessories (must be ordered separately)

Fan Jet 30 - 11 E (see page 81)	**46983**
LED Modul MDD XL 3D /DMX/02 (see page 182)	**48638**
Connecting cable DMX /01 (see page 194)	**Order no.**
Connecting cable DMX / 1.0 m /01	**12368**
Connecting cable DMX / 1.5 m /01	**49628**
Connecting cable DMX / 3.0 m /01	**12369**
Connecting cable DMX / 5.0 m /01	**12371**
Connecting cable DMX / 10.0 m /01	**12372**
Connecting cable DMX / 20.0 m /01	**12373**
End resistant for BUS-system DMX/01	**12007**
DMX-Box /01	**57646**
Connecting cable 24 V DC /01 (see page 192)	**Order no.**
Connecting cable 24 V DC / 1.0 m /01	**12762**
Connecting cable 24 V DC / 1.5 m /01	**49629**
Connecting cable 24 V DC / 3.0 m /01	**12552**
Connecting cable 24 V DC / 7.5 m /01	**12553**
Connecting cable 24 V DC / 15.0 m /01	**11720**
PowerBox 24 V DC /01 (see page 192)	**50493**
WECS II 512 /DMX/02 (see page 206)	**56491**
WECS II 1024 /DMX/02 (see page 206)	**56492**
WECS II 2048 /DMX/02 (see page 212)	**56507**

Multi Directional Drive XL 3D /DMX/02			
Dimensions (L x W x H)		[mm]	1493 x 1085 x 965
Electrical Connection (primary)	Rated voltage	[V AC]	230
	Rated frequency	[Hz]	50/60
	Max. power consumption	[W]	600
Device connection (secondary)	Rated voltage	[V/DC]	24
	Max- current consumption	[A]	25
Power			3 x Unterwater power supply (50733)
Length of power connection cable		[m]	3 x 10
DMX/RDM-Connection			with Box
Water depth for park position		[mm]	850
Min. water depth		[mm]	650
Max. immersion depth		[m]	1
Pivoting range, delivery state X/Y-axis		[°]	Depending on the nozzle used
Pivoting range, freely adjustable X/Y-axis		[°]	Depending on the nozzle used
Max. pivoting speed		[°/s]	60
Max. rotational speed		[°/s]	360
Connection for nozzle		[inch]	G3 internal thread
Connection pressure line		[inch]	2 x G3 external thread
Protection type			IP 68
Max. pressure		[bar]	4
Material			Stainless steel 1.4571 (AISI 316Ti)
Weight		[kg]	236
Order no.			**46982**

Nozzles
Controllable

	Fresh Water	Pool Water	Sea Water	220-240 V	400 V	110-120 V	50 Hz	60 Hz	12 V AC	24 V DC	DMX	DMX/ RDM	Plug and Spray
Rotation modul L /DMX/02	●	●	●	○	○	○	○	○	○	●	●	●	●

Rotation modul L /DMX/02

The Rotation modul L /DMX/02 is an endless rotary drive that can be controlled individually via DMX/RDM. In combination with a nozzle it creates impressive dynamic water images.

Due to the individual control, the nozzle can be moved endlessly and positional in all directions at different speed up to max. Turn 720°/s. The Rotation modul is ideal for the Fan Nozzle 15 - 8 E (53047) and Finger nozzle 7 - 15 E (51110).

Rotation modul L /DMX/02

The Rotation modul is designed for the use of fresh water, pool water and sea water and has a waterproof 24 V DC and DMX plug connection.

Product characteristics at a glance

- Endless rotation in both directions, individually positionable and controllable in different speed, max. 720°/s
- Min. water height of 240 mm
- Accurate control of all positional, also for asynchronous nozzles
- Suitable for various nozzles specially Fan Nozzle 15 - 8 E (53047) and Finger nozzle 7 - 15 E (51110)
- G 1 ½"- internal thread connection for nozzle, G 2"- internal thread connection for pressure pipe
- Robust stainless steel design
- Suitable for fresh water, pool water and sea water operation
- Energy efficient motor, 24 V DC
- DMX/RDM capable
- Controllable with OASE DMX/RDM devices (WECS II) (not included)

Rotation modul L / DMX/02	
DWB [l/min]	DDB [bar]
150	0.09
200	0.11
250	0.13
300	0.16
400	0.31
500	0.43
600	0.72
700	0.94
800	1.12

Accessories (must be ordered separately)

Finger nozzle 7 - 15 E (see page 86)	51110
Fan Jet 15 - 8 E (see page 80)	53047
ProfiLux LED 320 / DMX / 02 (see page 156)	50717
Underwater power supply 250 / 24 V /01 (see page 202)	50733
Connecting cable DMX /01 (see page 194)	**Order no.**
Connecting cable DMX / 1.0 m /01	12368
Connecting cable DMX / 1.5 m /01	49628
Connecting cable DMX / 3.0 m /01	12369
Connecting cable DMX / 5.0 m /01	12371
Connecting cable DMX / 10.0 m /01	12372
Connecting cable DMX / 20.0 m /01	12373
End resistant for BUS-system DMX/01	12007
DMX-Box /01	57646
Connecting cable 24 V DC /01 (see page 192)	**Order no.**
Connecting cable 24 V DC / 1.0 m /01	12762
Connecting cable 24 V DC / 1.5 m /01	49629
Connecting cable 24 V DC / 3.0 m /01	12552
Connecting cable 24 V DC / 7.5 m /01	12553
Connecting cable 24 V DC / 15.0 m /01	11720
PowerBox 24 V DC /01 (see page 192)	50493
WECS II 512 /DMX/02 (see page 206)	56491
WECS II 1024 /DMX/02 (see page 206)	56492
WECS II 2048 /DMX/02 (see page 212)	56507

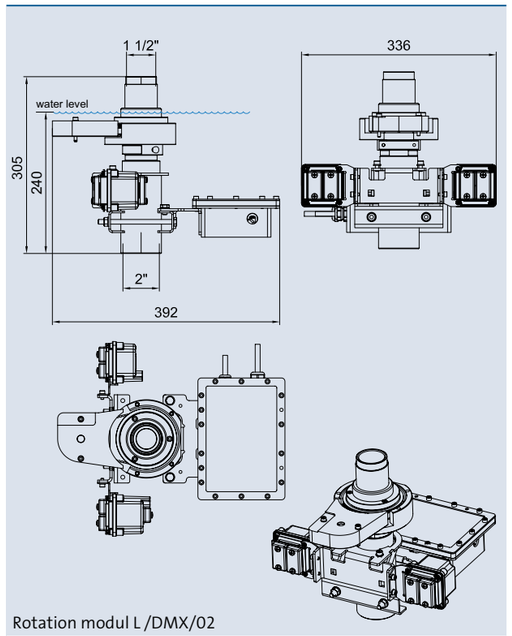

Rotation modul L /DMX/02

Rotation modul L /DMX/02		
Dimensions (L x W x H)	[mm]	392 x 336 x 305
Nominal voltage	[V/DC]	24
Power consumption	[W]	35
Nominal current	[A]	1.1
Max. operation pressure	[bar]	2.0
Protection class		IP 68
Power connection		with box
DMX/RDM connection		with box
Material		Stainless steel 1.4571 (AISI 316Ti) / Ceramic / POM
Weight	[kg]	25
Order no.		71244

	Fresh Water	Pool Water	Sea Water	220-240 V	400 V	110-120 V	50 Hz	60 Hz	12 V AC	24 V DC	DMX	DMX/ RDM	Plug and Spray
AirNozzle	●	●	●*	○	○	○	○	○	○	●	○	○	●

*Seawater product version on request

AirNozzle 20 E-15 m/24 E-20 m horizontal /01
AirNozzle 15 E-6 m/20 E-14 m vertical /01

The compressed air driven AirNozzle is controlled by DMX with the DMX Underwater Switch 24 V DC /DMX/02.

The use of compressed air leads to an optimized use of energy. With the DMX-capable Underwater Switch 24 V DC /DMX/02 system costs can be further reduced to 50 %. The different designs provide solutions for shallow water applications. There are four standard AirNozzles:
48422 AirNozzle 15 E-6 m vertical /01
48423 AirNozzle 20 E-14 m vertical /01
48424 AirNozzle 20 E-15 m horizontal /01
48425 AirNozzle 24 E-20 m horizontal /01

Product characteristics at a glance

- **Compact, robust stainless steel AirNozzle**
- **IP 68 in 24 voltage technology; for underwater use**
- **Pluggable, easy to install and to connect through underwater OASE technology**
- **Short refill time – up to 15 shots per minute**
- **For fountain heights up to 20 m**
- **Sea water AirNozzle on request**

System integration Generally AirNozzles are connected to a compressed air piping system where the pipe itself acts as the air reservoir. The pipe is almost continuously replenished by a compressor. Therefore no additional air reservoir is required to be connected to the Air-Nozzle. The volume of the pipe and the standard pressure should be chosen in such way that after a shot with all nozzles the residual pressure doesn't fall below 90 % of the default value. In more complex supply systems the target pressure can be varied in order to achieve different jet heights.

AirNozzle 20 E-15 m / 24 E-20 m horizontal /01

AirNozzle 15 E-6 m / 20 E-14 m vertical /01

AirNozzle 20 E-15 m horizontal /01

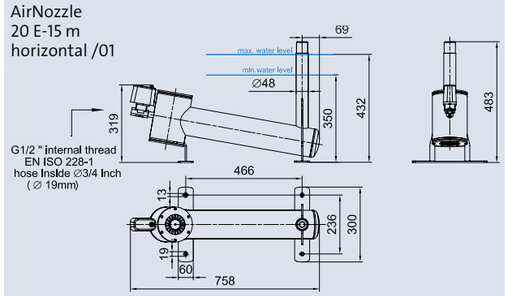

AirNozzle 24 E-20 m horizontal /01

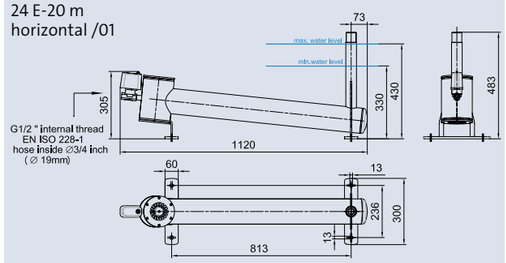

Air pressure [bar]	Height [m]	Shooting time every [s]	Air demand per shot [l]
AirNozzle 20 E-15 m horizontal /01			
0.50	1.50	2.00	1.50
1.00	4.50	3.00	2.50
1.50	8.50	4.20	4.50
2.00	12.00	5.10	5.50
2.50	15.00	6.30	10.50
AirNozzle 24 E-20 m horizontal /01			
1.00	4.60	3.90	3.00
2.00	11.00	6.10	9.00
3.00	15.00	7.60	11.50
4.00	18.00	9.30	20.00
4.50	20.00	9.30	21.50
AirNozzle 15 E-6 m vertical /01			
0.50	2.00	2.00	0.50
0.75	4.00	3.00	1.50
0.90	5.00	4.00	2.00
1.00	6.00	4.00	2.50
AirNozzle 20 E-14 m vertical /01			
0.75	3.00	4.00	2.00
1.00	4.00	4.00	2.00
1.50	10.00	4.00	3.50
2.00	14.00	4.00	7.50

Water Level & Refill behavior For a long-term stable operation, it is important to keep the water level constant. This is because the fill level and the replenishment time depends on the water level. In this sense the best surrounding for such water features are waterbodies in which the water level is determined by a dam or an overflow.

AirNozzle 15 E-6 m vertical /01

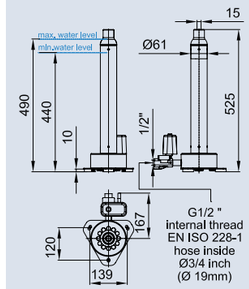

AirNozzle 20 E-14 m vertical /01

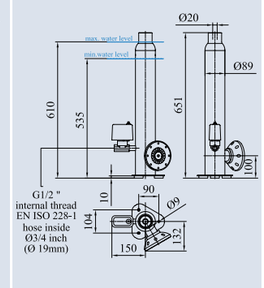

Accessories (must be ordered separately)

Underwater Switch 24 V DC /DMX/02 (see page 200)	56411
Underwater power supply 250 / 24 V /01 (see page 202)	50733
Connecting cable DMX /01 (see page 194)	**Order no.**
Connecting cable DMX / 1.0 m /01	12368
Connecting cable DMX / 1.5 m /01	49628
Connecting cable DMX / 3.0 m /01	12369
Connecting cable DMX / 5.0 m /01	12371
Connecting cable DMX / 10.0 m /01	12372
Connecting cable DMX / 20.0 m /01	12373
End resistant for BUS-system DMX/01	12007
DMX-Box /01	57646
Connecting cable 24 V DC /01 (see page 192)	**Order no.**
Connecting cable 24 V DC / 1.0 m /01	12762
Connecting cable 24 V DC / 1.5 m /01	49629
Connecting cable 24 V DC / 3.0 m /01	12552
Connecting cable 24 V DC / 7.5 m /01	12553
Connecting cable 24 V DC / 15.0 m /01	11720
PowerBox 24 V DC /01 (see page 192)	50493
WECS II 512 /DMX/02 (see page 206)	56491
WECS II 1024 /DMX/02 (see page 206)	56492
WECS II 2048 /DMX/02 (see page 212)	56507

AirNozzle		20 E-15 m horizontal /01	24 E-20 m horizontal /01	15 E-6 m vertical /01	20 E-14 m vertical /01
Dimensions (L x W x H)	[mm]	758 x 300 x 483	1120 x 300 x 483	264 x 139 x 525	203 x 116 x 651
Shooting frequency/water refill time	[s]	4-10	4-10	2-4	4
Amount of water per shot	[l]	7	10	0.75	2.50
Nozzle diameter	[mm]	20	24	15	20
Min./Max. water level	[mm]	330-430	330-430	440-490	525-610
Max. air pressure	[bar]	3	5	1	2
Air inlet dia.	[inch]	½	½	½	½
Water jet height up to	[m]	15	20	6	14
Voltage(solenoid valve)	[V/DC]	24	24	24	24
Power (solenoid valve)	[W]	11	11	11	11
Material		Stainless steel 1.4571 (AISI 316 Ti)	Stainless steel 1.4571 (AISI 316 Ti)	Stainless steel 1.4571 (AISI 316 Ti)	Stainless steel 1.4571 (AISI 316 Ti)
Power cable length	[m]	7.50	7.50	7.50	7.50
Weight	[kg]	14.50	17.00	5.6	8.1
Order no.		48424	48425	48422	48423

	Fresh Water	Pool Water	Sea Water	220-240 V	400 V	110-120 V	50 Hz	60 Hz	12 V AC	24 V DC	DMX	DMX/ RDM	Plug and Spray
AirNozzle	●	●	●*	○	○	○	○	○	○	●	○	○	●

*Seawater product version on request

AirNozzle 24 E-30 m vertical /01
AirNozzle 50 E-50 m vertical /01
AirNozzle 50 E-70 m vertical /01

AirNozzle 50 E-50

The compressed air driven AirNozzle is available for high fountain heights of 30, 50 and 70 m. These AirNozzle are operated with compressed air and can be controlled by DMX with the DMX Underwater Switch 24 V DC / DMX / 02.

Product characteristics at a glance

- Compact, robust stainless steel AirNozzle
- IP 68 in 24 volt technology; for underwater use
- Pluggable, easy to install and to connect through underwater OASE technology
- Short refill time – up to 2 shots per minute
- For fountain heights up to 70 m (higher fountain heigts on request)
- Sea water AirNozzle on request

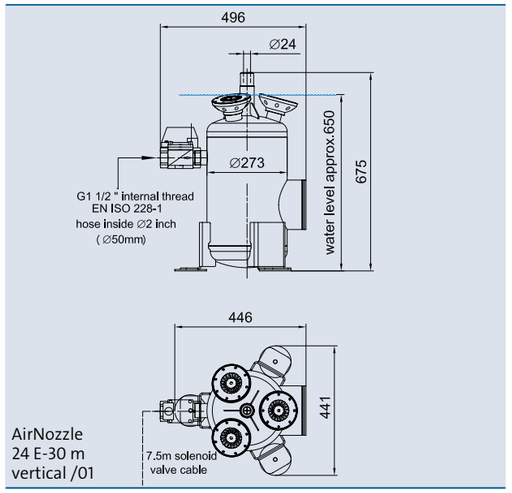

AirNozzle
24 E-30 m
vertical /01

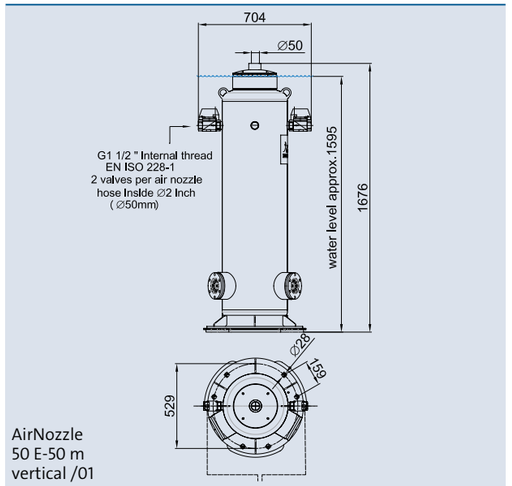

AirNozzle
50 E-50 m
vertical /01

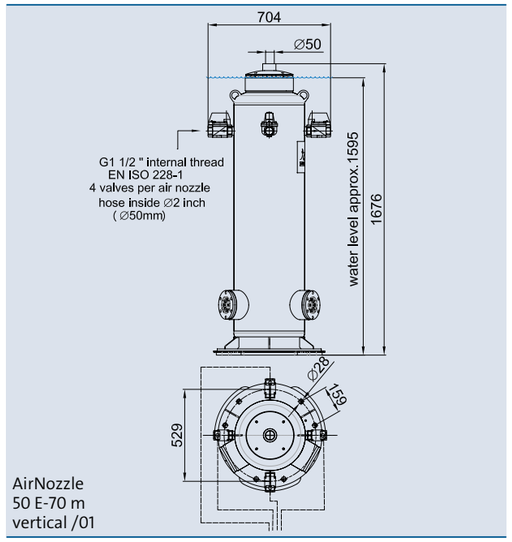

AirNozzle
50 E-70 m
vertical /01

Air pressure [bar]	Height [m]	Shooting time every [s]	Air demand per shot [l]
AirNozzle 24 E-30 m vertical /01			
5.2	30	6	45
AirNozzle 50 E-50 m vertical /01			
8	50	25	250
AirNozzle 50 E-70 m vertical /01			
12	70	25	650

Accessories (must be ordered separately)

Underwater Switch 24 V DC /DMX/02 (see page 200)	**56411**
Underwater power supply 250 / 24 V /01 (see page 202)	**50733**
Connecting cable DMX /01 (see page 194)	**Order no.**
Connecting cable DMX / 1.0 m /01	12368
Connecting cable DMX / 1.5 m /01	49628
Connecting cable DMX / 3.0 m /01	12369
Connecting cable DMX / 5.0 m /01	12371
Connecting cable DMX / 10.0 m /01	12372
Connecting cable DMX / 20.0 m /01	12373
End resistant for BUS-system DMX/01	12007
DMX-Box /01	57646
Connecting cable 24 V DC /01 (see page 192)	**Order no.**
Connecting cable 24 V DC / 1.0 m /01	12762
Connecting cable 24 V DC / 1.5 m /01	49629
Connecting cable 24 V DC / 3.0 m /01	12552
Connecting cable 24 V DC / 7.5 m /01	12553
Connecting cable 24 V DC / 15.0 m /01	11720
PowerBox 24 V DC /01 (see page 192)	**50493**
WECS II 512 /DMX/02 (see page 206)	**56491**
WECS II 1024 /DMX/02 (see page 206)	**56492**
WECS II 2048 /DMX/02 (see page 212)	**56507**

AirNozzle horizontal /01		24 E-30 m vertical /01	50 E-50 m vertical /01	50 E-70 m vertical /01
Dimensions (L x W x H)	[mm]	496 x 441 x 675	1676 x 704 x 600	1676 x 704 x 600
Shooting frequency/water refill time	[s]	6	25	25
Max, Amount of water per shot	[l]	45	180	180
Nozzle diameter	[mm]	24	50	50
Min. water level needed	[m]	650	1595	1595
Max. air pressure	[bar]	6.0	11.0	15.0
Air inlet dia.	[inch]	1½	1½	1½
Water jet height up to	[m]	30	50	70
Voltage (solenoid valve)	[V/DC]	24	24	24
Power (solenoid valve)	[W]	18.5	18.5	18.5
Material		Stainless steel 1,4301 (AISI 304)	Stainless steel 1,4301 (AISI 304)	Stainless steel 1,4301 (AISI 304)
Power cable length	[m]	7,50	7,50	7,50
Weight	[kg]	20	79	80
Order no.		48426	48427	48428

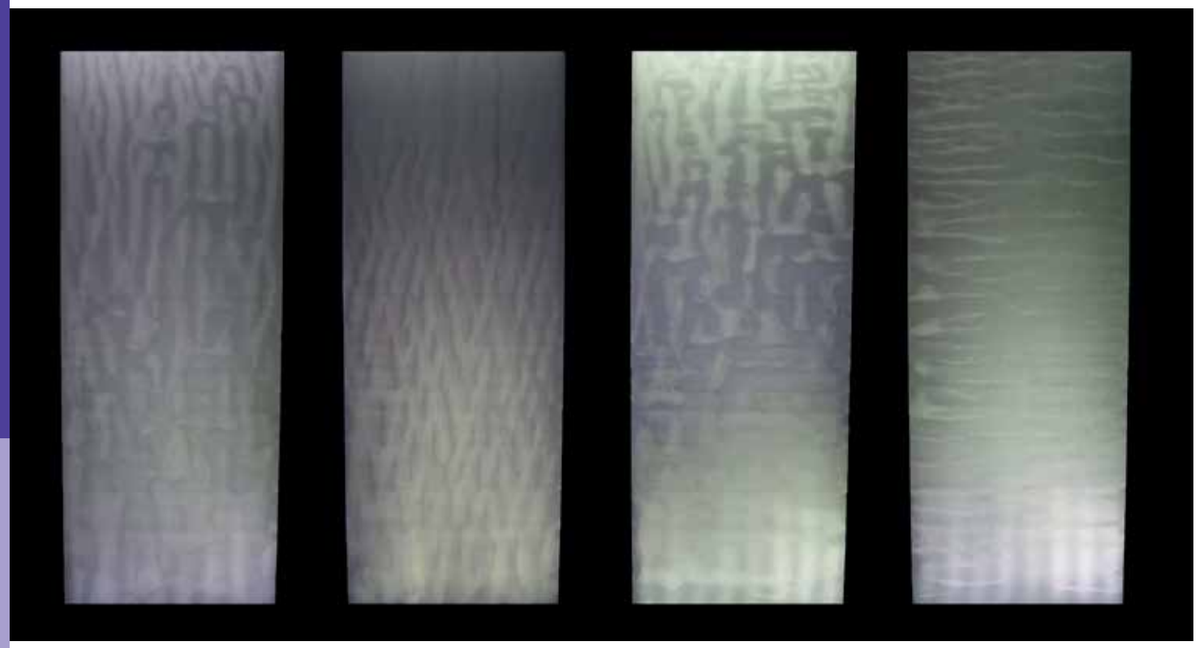

	Fresh Water	Pool Water	Sea Water	220-240 V	400 V	110-120 V	50 Hz	60 Hz	12 V AC	24 V DC	DMX	DMX/ RDM	Plug and Spray
LiquidArtWall	●	○	○	●	●	●	●	●	○	○	●	●	●

LiquidArtWall

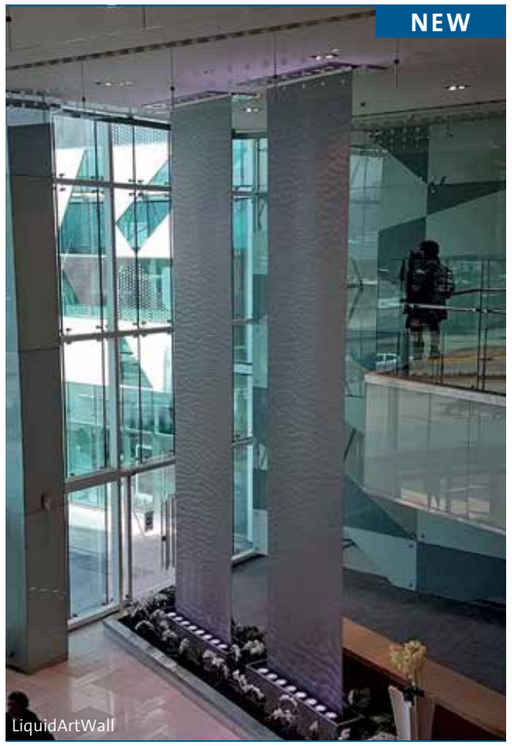

LiquidArtWall

LiquidArtWall - as an attractive and vibrant element this modular water wall is suitable for the use in public areas, such as Shopping malls, office complexes, wellness areas and theme parks. The height and width of the LiquidArtWall is project-dependent.

Product characteristics at a glance

- Changing water images
- Low noise water feature
- Attractive design concept
- Remarkable room divider
- Effective room humidifier
- Climate improvement
- Ideal for projection of videos and or lasers

LiquidArtWall			
Water demand per meter of mesh width (max.):		[l/min]	Approx. 50
Weight	Mesh	[kg/m²]	Approx. 5
Weight	Overflow trough with suspension	[kg/m]	Approx. 150
Material			Stainless steel
Order no.			58912

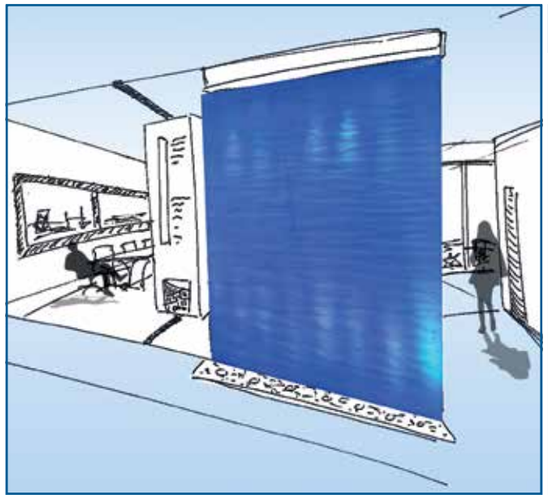

Office

- Create a calm atmopshere
- Elegant alternative to frosted glass and conventional partition walls
- WaterScreen protects visibility and privacy
- Generate a pleasant climate

Reception area

- High quality design element as a special feature
- Soothing sound of running water
- Brings the overall design together
- Creates optimal room climate (humidity, air circulation)

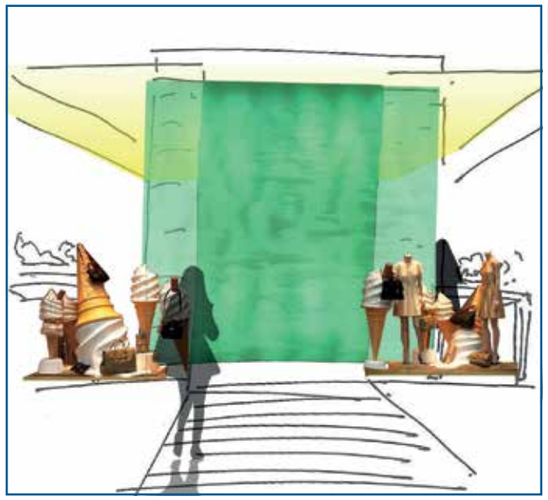

Shopping Mall

- Individual design possibilities
- Exclusive designs
- Living water fascinates both coworkers and customers
- Communication area for the brand

Nozzles
Controllable

	Fresh Water	Pool Water	Sea Water	220-240 V	400 V	110-120 V	50 Hz	60 Hz	12 V AC	24 V DC	DMX	DMX/ RDM	Plug and Spray
FlashWall	●	○	○	●	○	●	●	●	○	○	●	○	○

FlashWall

As an attractive and vibrant element this modular interactive water wall is suitable for the use in public areas, such as Shopping malls, office complexes and theme parks. The unique arrangement of the nozzles allows for an extremely dense curtain of water, which guarantees high visibility.

This water curtain creates graphics, designs, characters, etc., which can be represented through the use of a fast reacting valve technology. Thereby the OASE FlashWall allows for almost unlimited opportunities to convey (advertising) messages. In optional combination with an SMS interface it can be also used as an interactive communication platform.

Product characteristics at a glance

- Modular flash wall system - straight / curved (Ø 3, 4, 5, 6, 7 or 8 m are possible)
- Close packed nozzle/ valve arrangement for dense water curtain guaranteeing high resolution
- Ideally suited for rear projection for videos and laser graphics
- Control of the entire FlashWall or scene selection via DMX Artnet.
- Precise valve control via CAN bus.
- Accurately defined text and graphics displays due to fast reacting valve technology
- Optional: LED RGB Illumination
- Optional: SMS interface for the display of personal text messages

Technical details

- For fresh-water, max 50 µm particles allowed
- 110 - 240 V 50/60 Hz power supply
- Transformers can be at the flash wall or in separate area control cabinet, depending on environment conditions
- Max. height recommended 10 m (under zero wind condition)
- Nozzle diameter 4.6 mm
- Individually configured water inlet and water outlet

FlashWall

FlashWall

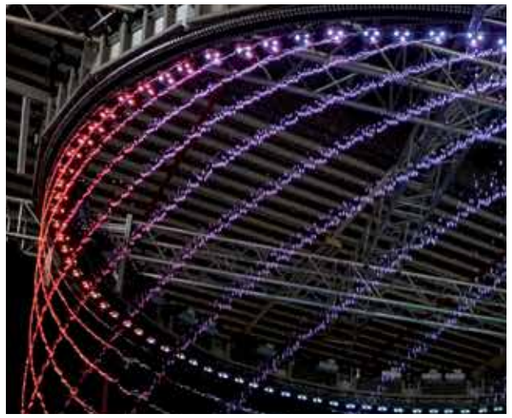

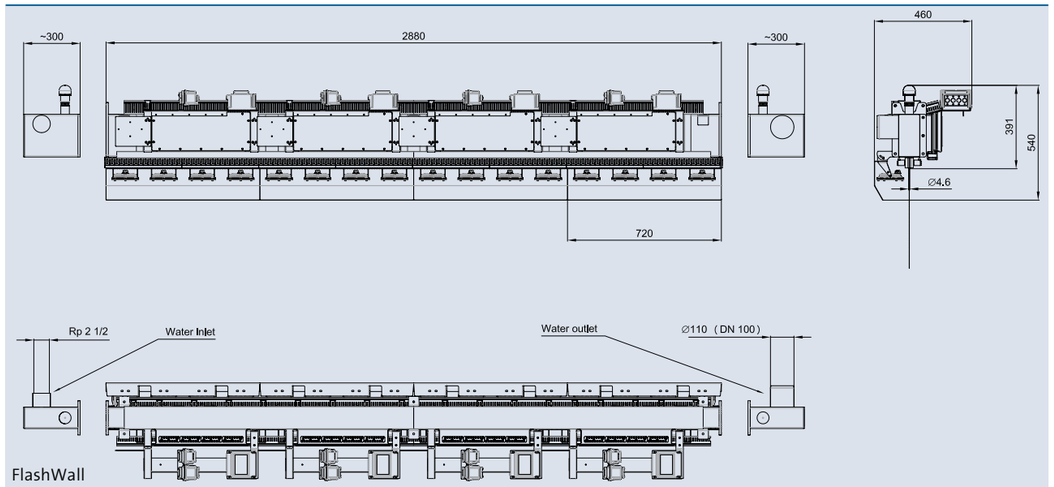

FlashWall

Accessories (must be ordered separately)

Connecting cable DMX /01 (see page 194)	Order no.
Connecting cable DMX / 1.0 m /01	12368
Connecting cable DMX / 1.5 m /01	49628
Connecting cable DMX / 3.0 m /01	12369
Connecting cable DMX / 5.0 m /01	12371
Connecting cable DMX / 10.0 m /01	12372
Connecting cable DMX / 20.0 m /01	12373
End resistant for BUS-system DMX/01	12007
DMX-Box /01	57646
WECS II 512 /DMX/02 (see page 206)	56491
WECS II 1024 /DMX/02 (see page 206)	56492
WECS II 2048 /DMX/02 (see page 212)	56507

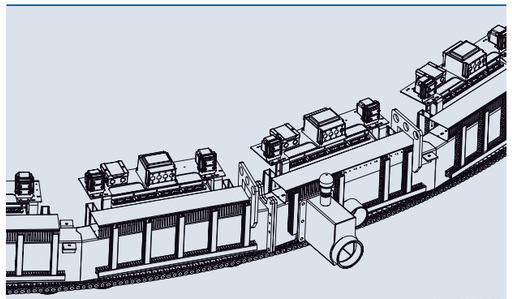

FlashWall

Dimension of the module*	A mm	720	1440	2160	2880
Amount of valves	[pieces]	64	128	192	256
Distance between the nozzles	[mm]	11,25	11,25	11,25	11,25
Rated voltage	[V/DC]	24	24	24	24
Power consumption	[W]	450	900	1350	1800
Nozzle water requirement	[l/min]	32	64	96	128
Material		Stainless steel / POM	Stainless steel / POM	Stainless steel / POM	Stainless steel / POM
Weight dry	[kg]	35	70	105	140
Weight filled with water	[kg]	42	84	126	168
Order no.		58975	58975	58975	58975

*Any combination of different module is possible.

Nozzles
Controllable

	Fresh Water	Pool Water	Sea Water	220-240 V	400 V	110-120 V	50 Hz	60 Hz	12 V AC	24 V DC	DMX	DMX/ RDM	Plug and Spray
VarioJet	●	●	●*	○	○	○	○	○	○	○	○	○	○

*Seawater product version on request

VarioJet

The VarioJet Nozzle creates a dynamic, variable water pattern. The nozzle is driven by two Varionaut pumps.

The nozzle generates spray patters from a water bell up to a single stream. These different water patterns are formed by controlling both the Varionaut pumps individually.

Product characteristics at a glance

- **Dynamic and variable water pattern with two Varionaut pumps**
- **Compact, robust stainless steel nozzle**
- **2 pressure connections**
- **Nozzle with adjustable flange**
- **Sea water VarioJet on request**

Sold in the US in cooperation with Technifex

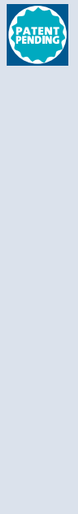

VarioJet 42 - 15

VarioJet 55 - 20

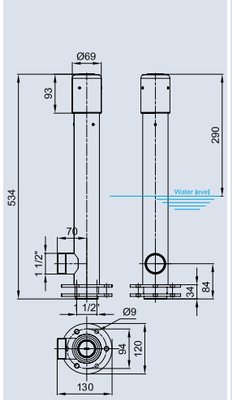

VarioJet 42 - 15

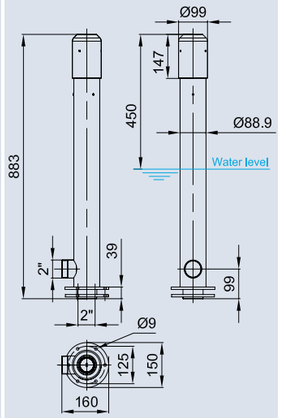

VarioJet 55 - 20

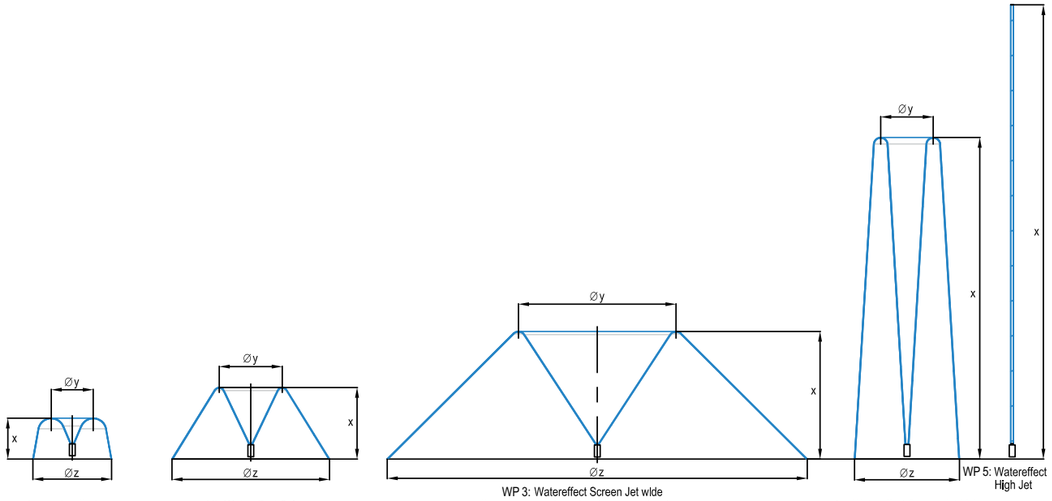

WP 1: Watereffect Lava

WP 2: Watereffect Calyx

WP 3: Watereffect Screen Jet wide
The nozzle creates a thin transparent water screen

WP 4: Watereffect Screen Jet high

WP 5: Watereffect High Jet

VarioJet		42 - 15	55 - 20
Dimensons (L x W x H) [mm]	[mm]	130 x 120 x 534	160 x 150 x 883
Max. Fontain height (2x Varionaut 150) [m]	[m]	2.9	–
Max.Fontain height (2x Varionaut 240 24V DC) [m]	[m]	4.6	–
Max. Fontain height (2x Varionaut 270) [m]	[m]	5.4	–
Max. Fontain height (2x Varionaut 400) [m]	[m]	–	9.0
Material		Stainless steel 1.4301 (AISI 304)	Stainless steel 1.4301 (AISI 304)
Weight [kg]	[kg]	5.1	13.2
Order no.		52128	52129

	Fresh Water	Pool Water	Sea Water	220-240 V	400 V	110-120 V	50 Hz	60 Hz	12 V AC	24 V DC	DMX	DMX/ RDM	Plug and Spray
CrownNozzle 24 - 20 E	●	●	●*	○	○	○	○	○	○	○	○	○	○

*Seawater product version on request

CrownNozzle 24 - 20 E

The CrownNozzle is a multi-jet nozzle. The 24 fixed, drilled in inclined direction nozzle outlets generate a majestic watter pattern and thereby achieve a fountain height of up to 5 m.

The CrownNozzle creates 24 clear and precise single jets each with a diameter of 6 mm. This stainless steel nozzle is suitable for fresh water and pool water application. The CrownNozzle, in combination with the Varionaut pumps, creates spectacular and dynamic water patterns.

Product characteristics at a glance

- 24 x 6 mm precise full jets
- Water-level independent
- Stainless steel
- Sea water CrownNozzle on request

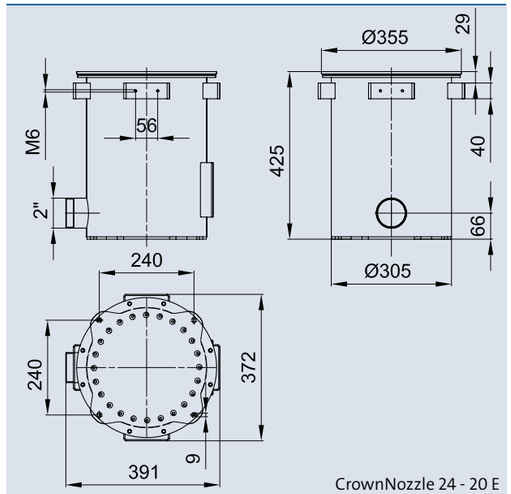

CrownNozzle 24 - 20 E

CrownNozzle 24 - 20 E

CrownNozzle 24 - 20 E				
Dimensions (L x W x H) [mm]				391 x 372 x 425
Fountain height		DSD	DWB	DDB
		[m]	[l/min]	[bar]
1.00	[m]	0.85	116	0.11
2.00	[m]	1.55	162	0.23
3.00	[m]	2.40	202	0.35
4.00	[m]	3.20	237	0.49
5.00	[m]	3.90	270	0.64
Material				Stainless steel 1.4301 (AISI 304)
Weight	[kg]			approx. 16
Order no.				32780

	Fresh Water	Pool Water	Sea Water	220-240 V	400 V	110-120 V	50 Hz	60 Hz	12 V AC	24 V DC	DMX	DMX/ RDM	Plug and Spray
VarioJet CrownNozzle 20 E	●	●	●*	○	○	○	○	○	○	○	○	○	○

*Seawater product version on request

VarioJet CrownNozzle 20 E

VarioJet CrownNozzle is a nozzle for connecting 3 Varionaut 400 pumps. The combination of CrownNozzle and VarioJet 55 - 20 with three highly dynamic individually controllable fountain pumps creates breath taking, repeatable, living water effects.

The CrownNozzle is driven by one pump. This multi-jet nozzle, with 24 fixed diagonally drilled nozzles creates a majestic water image.
Two additional pumps are connected to the part of the VarioJet nozzle. This part of the nozzle generates on the one hand a water bell, on the other hand a single jet. The transition from one water image to the other with variable volumetric flow creates further new water images. If the water pattern of the CrownNozzle is overlaid with the water pattern of the water bell, a completely new water image is created - a water lily.

Experience these and other effects in the video of the Varionaut 400.

Product characteristics at a glance

- Highly dynamic, variable water images in combination with three Varionaut 400 pumps
- VarioJet CrownNozzle is a combination of CrownNozzle and VarioJet Nozzle
- 24 x 6 mm nozzle bores in the CrownNozzle
- Water level independent
- Compact, robust stainless steel nozzle
- 3 x pressure connection for the pumps
- Nozzle with adjusting flange
- *Sea water product version on request

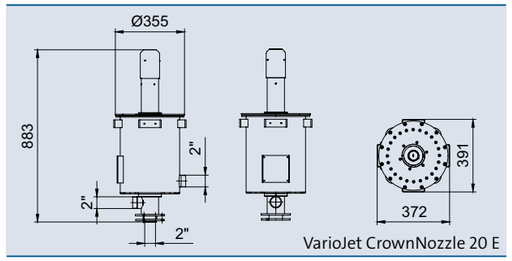

VarioJet CrownNozzle 20 E

*Hydraulic data for the VarioJet nozzle see page 57.

NEW

VarioJet CrownNozzle 20 E

VarioJet CrownNozzle 20 E				
Dimensions (L x W x H) [mm]				391 x 372 x 883
Fountain height (Crown)		DSD	DWB	DDB
		[m]	[l/min]	[bar]
1.00	[m]	0.85	116	0.11
2.00	[m]	1.55	162	0.23
3.00	[m]	2.40	202	0.35
4.00	[m]	3.20	237	0.49
5.00	[m]	3.90	270	0.64
Material				Stainless steel 1.4301 (AISI 304)
Pressure connection 3 x	[inch]			Thread G 2
Weight	[kg]			approx. 25
Order no.				58928

	Fresh Water	Pool Water	Sea Water	220-240 V	400 V	110-120 V	50 Hz	60 Hz	12 V AC	24 V DC	DMX	DMX/ RDM	Plug and Spray
FountainFlame /DMX/02	●	●	○	●	○	○	●	●	○	●	●	●	○

FountainFlame /DMX/02

The FountainFlame produces spectacular special effects of light, water and fire. The gas flame burns on top of the variable jet. The self-contained unit is powered by 230 V Technology.

The FountainFlame system is developed in co-operation with TBF-PyroTec, who contributed the ignition, burner and gas technology. These are integrated with OASE's DMX-controlled Varionaut 400 pump, LED Lighting and special nozzle to create fascinating special effects combining water and fire. The freely programmable FountainFlame, the water along with the flame, reaches a height of up to 8 m. The fire is carried up by the water. The RGB-LED-ProfiLux-lights illuminate the fountain jet individually. The ignition burner and the flame adjustment are also controlled via DMX. Thereby a variety of combined effects can be achieved with water and fire creating endless possibilities. The running flame can also be projected on a water jet parabola. This system is available as a fixed installation or as a mobile device. The FountainFlame is designed for use in fresh water and pool water* and has a waterproof 24 V DC power connection for illumination and a waterproof DMX data connection. The FountainFlame is DMX/RDM capable.

FountainFlame /DMX/02

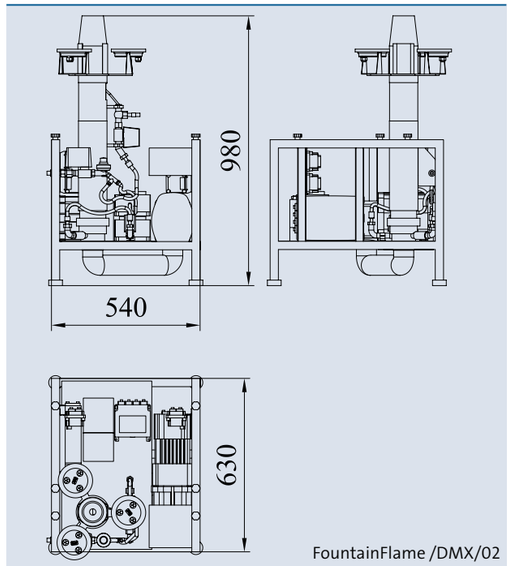

FountainFlame /DMX/02

Product characteristics at a glance

- **Continuously DMX-controlled water jet along with the flame reaches a height up to 8 m**
- **RGB-LED spotlights to illuminate the fountain jet**
- **DMX-controlled ignition burner and flame adjustment**
- **Large variety of combined fire and water effects, and even more to discover**
- **The running flame can also be projected on a parabolic jet of water**

Scope of delivery

- 1 x 46421 Varionaut 400 /DMX/02
- 1 x 50523 Comet Prec 20 - 20 Silver
- 3 x 50717 ProfiLux 320 /DMX/02
- 1 x 50720 Underwater LED Driver /DMX/02
- 1 x Underwater Switch 24 V DMX/0
- 1 x Flame System

Propane gas (5.0 to 7.5 kg/h) at 3 bar
Other gases on request.

		Comet Prec 20 - 20 Silver on Varionaut 400 /DMX/02	
Fountain height		DWB	DDB
		[l/min]	[bar]
1.00	[m]	90	0.12
1.25	[m]	96	0.14
1.50	[m]	102	0.17
1.75	[m]	110	0.19
2.00	[m]	117	0.22
2.50	[m]	132	0.28
3.00	[m]	147	0.34
3.50	[m]	160	0.40
4.00	[m]	170	0.46
5.00	[m]	206	0.57
6.00	[m]	227	0.69
7.00	[m]	245	0.81
Material		Stainless steel	

		FountainFlame /DMX/02
Dimensions (L x W x H) with pump	[mm]	540 x 630 x 980
Order no.		52126

	Fresh Water	Pool Water	Sea Water	220-240 V	400 V	110-120 V	50 Hz	60 Hz	12 V AC	24 V DC	DMX	DMX/ RDM	Plug and Spray
BigFlameAqua	●	●	○	●	○	○	○	○	○	○	○	○	○

BigFlameAqua

BigFlameAqua produces breathtaking fireballs with a height of up to 10 m. The BigFlameAqua is optimal for high and extensive outdoor fire effects.

Product characteristics at a glance

- Breathtaking fireballs
- Extensive fire effect of up to 10 m
- High and extensive outdoor fire effects
- Operated with 100 % propane gas
- Power connection
  3 x 230 V
  - Safety valve
  - Ignition
  - Effect valve

NEW

BigFlameAqua

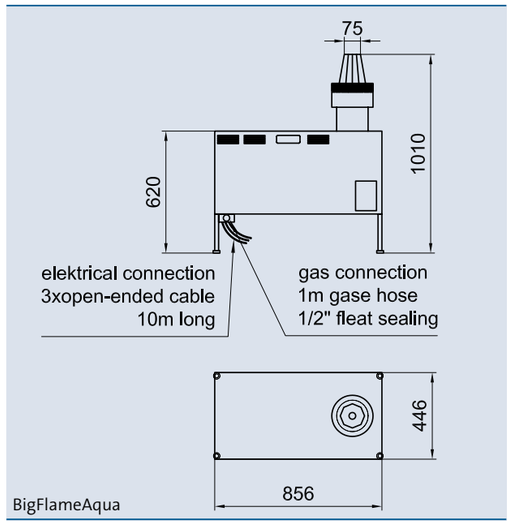

BigFlameAqua

The BigFlameAqua is a propane gas driven flame projector, capable of emitting effect flames with a height of up to 10 m. Latest burner technology and control systems allow operating the unit with the highest possible functional safety. The device is basically designed for outdoor use and is installed in the water basin. The flame can be triggered with the corresponding cable remote control from a distance of up to 100 m.

Scope of delivery

- 1 x BigFlame-system (856 x 440 x 1010 mm) incl.
  10 m cable (electronic connection)
  1 m gas hose ½" flat sealing

Fill pressure	Flame height vertical (still air)		Fill time in seconds, gas supply at 20°C with 4.5 bar	Gas demand per shot	
[bar]	[m]	[ft]	[s]	[g]	[oz]
1.0	5	16.5	Approx. 15	60	2.1
2.0	6	20	Approx. 20	120	4.2
3.0	8	26	Approx. 20	180	6.3
4.0	10	33	Approx. 25	240	8.4

BigFlameAqua		
Dimensions (L x W x H) incl. gas tank	[mm]	856 x 446 x 1010
Pressure range	[bar]	0.5-4.5
Safety distance (in still air conditions)	Sideways [m]	8
	Above [m]	17
Combustible (100 % propan)	[bar]	0.5-4.5
Gas connector in stainless steel hose		½" internal thread (EN ISO 228-1) flat sealing
Power	[W]	500
Nominal Voltage	[V, Hz]	230, 50/60
Weight	[kg]	70
Order no.		52127

	Fresh Water	Pool Water	Sea Water	220-240 V	400 V	110-120 V	50 Hz	60 Hz	12 V AC	24 V DC	DMX	DMX/ RDM	Plug and Spray
Fog/Mist System	*	✓	✓	✓	✓	✓	✓	✓	✓	✓	✓	✓	✓

*Tapwater

Fog/Mist System

These new Fog/Mist System produce a new, fascinating water effect. These fine droplets can be illuminated very well in the dark, thus creating a new dynamic water effect.

There are two different types of nozzles -mist nozzles and fog nozzles. Mist nozzles operate at a pressure of about 3 bar, and fog nozzles operate at about 80 bar.

Fog/Mist System

*Due to possible contamination in fresh water tap water, has to be used for the application of high-pressure fog nozzles. With a high-pressure nozzle the droplets are finer (the higher the pressure, the finer the water droplets).

Fog nozzles enhance lighting effects: a light matrix, for example, appears more voluminous, more majestic and dynamic. Mist nozzles create a spacial effect.

Product characteristics at a glance

- **Fog/Mist System project-oriented with LED lights**
- **Fog/Mist System is project-oriented with a chamber**
- **Individual solutions available on request**

An example of chamber with a mist nozzle:

- **With DA 110/ DN 100 connection (as per request 2, 3 or 4 pcs)**
- **High-quality, robust stainless steel construction**
- **Graphics shows special coverplate**

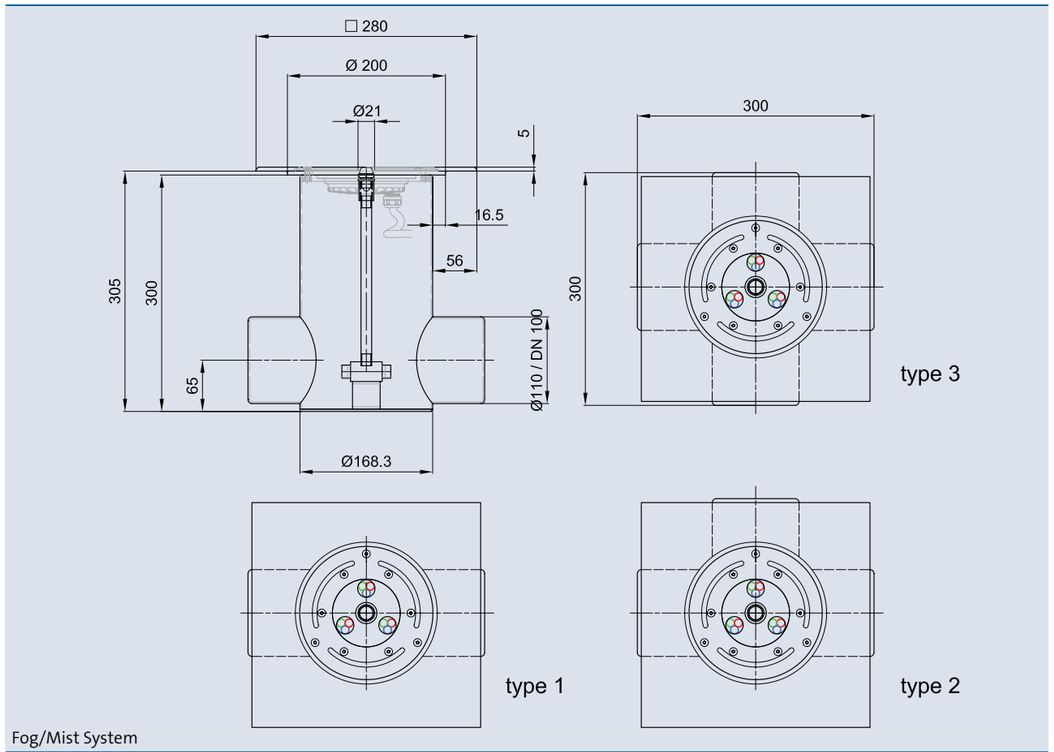

Fog/Mist System

Graphics shows special coverplate

Fog/Mist System		
Dimensions (L x W x H)	[mm]	300 x 300 x 305
Material		Stainless steel 1.4301 (AISI 304)
Weight	[kg]	7.5
Order no.		**58909**

	Fresh Water	Pool Water	Sea Water	220-240 V	400 V	110-120 V	50 Hz	60 Hz	12 V AC	24 V DC	DMX	DMX/ RDM	Plug and Spray
Comet-Silver	●	●	○	○	○	○	○	○	○	○	○	○	○

Comet 3 - 6 Silver to 15 - 17 Silver

These Single Jet nozzles generate a clear, full jet that is stable in wind. New is the silver optic of the Comet nozzles with durable chromed and nickel plated brass.

The new Comet 10 - 12 Silver and Comet 10 - 14 Silver is ideal for the combination with ProfiPlane LED 320 /DMX/02 and ProfiRing LED 320 / DMX/02 (see page 164-167).

Comet-Silver

Product characteristics at a glance

- Small to medium-sized single-jet nozzles
- Fountain heights 0.50 m to 12.00 m
- Clear wind-stable full jet
- 15° vertically pivoting ball joint
- Water-level independent
- With flow director
- Durable chrome and nickel plated brass
- Extensive design versatility: as a single fountain or in groups

Accessories (must be ordered separately)	Order no.
Sleeve 10 silver (see page 258)	51018
Sleeve 15 silver (see page 258)	51019
Reducing sleeve 15 x 10 (see page 259)	51032
Reducing sleeve 20 x 15 (see page 259)	51030

* Accessories for NPT-connection see page 258.

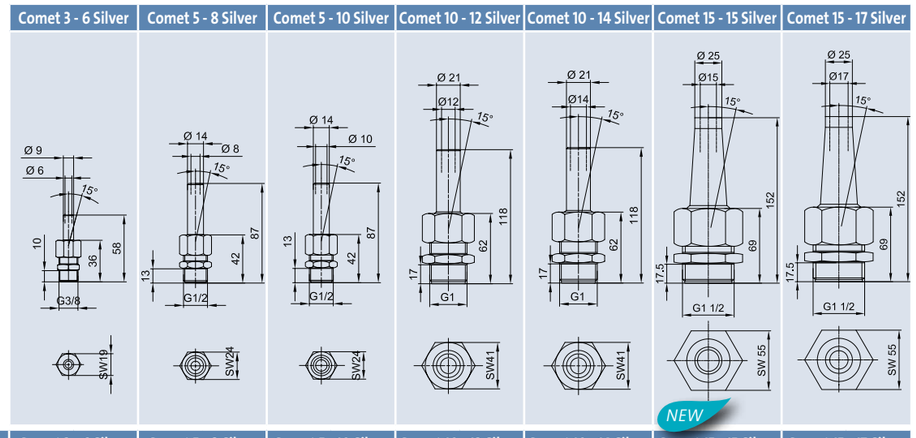

		Comet 3 - 6 Silver		Comet 5 - 8 Silver		Comet 5 - 10 Silver		Comet 10 - 12 Silver		Comet 10 - 14 Silver		Comet 15 - 15 Silver		Comet 15 - 17 Silver	
Dimensions (Ø x H) [mm]		22 x 58		28 x 87		28 x 87		47.3 x 118		47 x 118		63 x 152		63 x 152	
Fountain height		DWB	DDB	DWB	DDB	DWB	DDB	DWB	DDB	DWB	DDB	DWB	DDB	DWB	DDB
		[l/min]	[bar]	[l/min]	[bar]	[l/min]	[bar]	[l/min]	[bar]	[l/min]	[bar]	[l/min]	[bar]	[l/min]	[bar]
0.50	[m]	4.8	0.06	9.5	0.07	15	0.08	21	0.06	30	0.06	30	0.06	42	0.06
0.75	[m]	6.2	0.09	11.5	0.10	19	0.11	25	0.08	37	0.09	37	0.09	52	0.09
1.00	[m]	7.2	0.12	12.6	0.13	21	0.14	31	0.11	44	0.12	44	0.11	62	0.11
1.25	[m]	8.7	0.15	14.9	0.16	25	0.18	35	0.14	50	0.15	51	0.15	69	0.14
1.50	[m]	10.0	0.18	17.0	0.18	28	0.20	39	0.17	55	0.18	57	0.17	76	0.17
1.75	[m]	11.1	0.21	18.8	0.21	31	0.25	43	0.21	60	0.21	63	0.21	82	0.19
2.00	[m]	12.1	0.25	20.5	0.24	33	0.28	46	0.23	65	0.24	67	0.24	89	0.22
2.50	[m]	14.0	0.32	23.4	0.32	37	0.36	53	0.29	73	0.30	76	0.29	100	0.28
3.00	[m]	15.6	0.40	26.1	0.39	41	0.44	58	0.35	81	0.37	84	0.35	110	0.34
3.50	[m]			28.5	0.47	45	0.52	63	0.42	87	0.43	91	0,40	119	0.40
4.00	[m]			30.7	0.54	49	0.60	68	0.48	94	0.50	98	0.46	127	0.46
5.00	[m]					55	0.76	76	0.61	105	0.62	110	0.58	143	0.58
6.00	[m]					60	0.92	84	0.74	116	0.75	120	0.70	157	0.70
7.00	[m]							91	0.87	125	0.88	130	0.82	170	0.82
8.00	[m]							98	1.00	134	1.01	138	0.94	182	0.94
9.00	[m]									143	1.14	147	1.06	193	1.06
10.00	[m]									151	1.28	155	1.18	204	1.18
11.00	[m]													214	1.30
12.00	[m]													222	1.40
Material		Double coated brass													
Weight	[kg]	0.06		0.12		0.12		0.46		0.44		1.04		1.02	
Order no.		50721		50762		50722		45454		50723		48276		50724	

	Fresh Water	Pool Water	Sea Water	220-240 V	400 V	110-120 V	50 Hz	60 Hz	12 V AC	24 V DC	DMX	DMX/ RDM	Plug and Spray
Comet	●	○	○	○	○	○	○	○	○	○	○	○	○

Comet 3 - 5 T to 15-20 T

These single-jet nozzles generate a clear, full jet that is stable in wind.

These nozzles are usually arranged in a group. All sizes have a ball joint with which the jet can be pivoted up to 15° from the vertical plane. This feature makes it possible to generate interesting water patterns.

The Comet 10 - 12 T and Comet 10 - 14 T is ideal for the combination with ProfiPlane LED 320 /DMX/02 and ProfiRing LED 320 /DMX/02 (see page 164-167).

Comet 15 - 20 T

Product characteristics at a glance

- Small to medium-sized clear-jet nozzles with flow director
- Fountain heights 0.50 m to 14.00 m
- Clear wind-stable full jet
- Up to 15° vertically pivoting ball joint
- Water-level independent
- Extensive design versatility: as a single fountain or in groups

Accessories (must be ordered separately)	Order no.
Sleeve 10 silver (see page 258)	51018
Sleeve 15 silver (see page 258)	51019
Reducing sleeve 15 x 10 (see page 259)	51032
Reducing sleeve 20 x 15 (see page 259)	51030

* Accessories for NPT-connection see page 258.

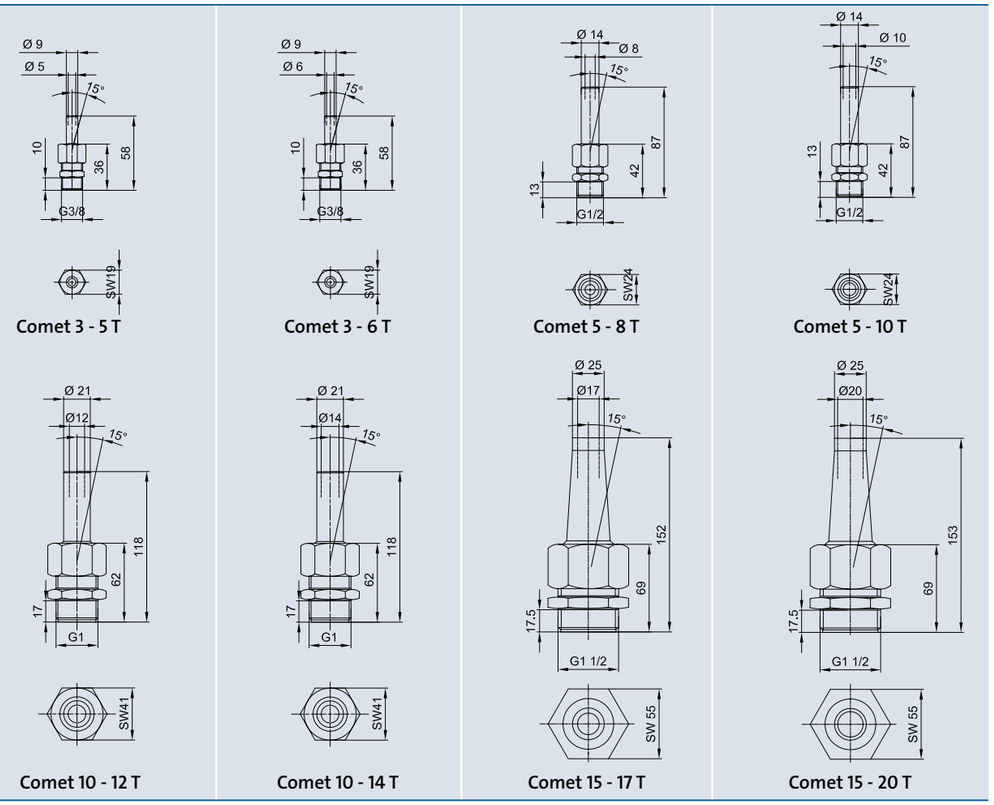

		Comet 3 - 5 T		Comet 3 - 6 T		Comet 5 - 8 T		Comet 5 - 10 T		Comet 10 - 12 T		Comet 10 - 14 T		Comet 15 - 17 T		Comet 15 - 20 T	
Dimensions (Ø x H) [mm]		19 x 58		21.9 x 58		27.6 x 87		27.6 x 87		47.3 x 118		47.3 x 118		63.3 x 152		63.3 x 152	
Fountain height		DWB	DDB	DWB	DDB	DWB	DDB	DWB	DDB	DWB	DDB	DWB	DDB	DWB	DDB	DWB	DDB
		[l/min]	[bar]	[l/min]	[bar]	[l/min]	[bar]	[l/min]	[bar]	[l/min]	[bar]	[l/min]	[bar]	[l/min]	[bar]	[l/min]	[bar]
0.50	[m]	3.8	0.07	4.8	0.06	9.5	0.07	15	0.08	21	0.06	30	0.06	42	0.06	59	0.06
0.75	[m]	5.3	0.09	6.2	0.09	11.5	0.10	19	0.11	25	0.08	37	0.09	52	0.09	74	0.08
1.00	[m]	6.3	0.13	7.2	0.12	12.6	0.13	21	0.14	31	0.11	44	0.12	62	0.11	88	0.13
1.25	[m]	7.2	0.15	8.7	0.15	14.9	0.16	25	0.18	35	0.14	50	0.15	69	0.14	99	0.16
1.50	[m]	8.0	0.18	10.0	0.18	17.0	0.18	28	0.20	39	0.17	55	0.18	76	0.17	110	0.17
1.75	[m]	8.7	0.22	11.1	0.21	18.8	0.21	31	0.25	43	0.21	60	0.21	82	0.19	119	0.21
2.00	[m]	9.3	0.25	12.1	0.25	20.5	0.24	33	0.28	46	0.23	65	0.24	89	0.22	128	0.22
2.50	[m]			14.0	0.32	23.4	0.32	37	0.36	53	0.29	73	0.30	100	0.28	144	0.28
3.00	[m]			15.6	0.40	26.1	0.39	41	0.44	58	0.35	81	0.37	110	0.34	158	0.34
3.50	[m]					28.5	0.47	45	0.52	63	0.42	87	0.43	119	0.40	171	0.39
4.00	[m]					30.7	0.54	49	0.60	68	0.48	94	0.50	127	0.46	184	0.45
5.00	[m]							55	0.76	76	0.61	105	0.62	143	0.58	206	0.57
6.00	[m]							60	0.92	84	0.74	116	0.75	157	0.70	227	0.69
7.00	[m]									91	0.87	125	0.88	170	0.82	245	0.81
8.00	[m]									98	1.00	134	1.01	182	0.94	263	0.92
9.00	[m]											143	1.14	193	1.06	279	1.04
10.00	[m]											151	1.28	204	1.18	294	1.16
11.00	[m]													214	1.30	309	1.28
12.00	[m]													222	1.40	323	1.40
13.00	[m]															337	1.52
14.00	[m]															350	1.64
Material		Brass															
Weight	[kg]	0.06		0.06		0.12		0.12		0.46		0.44		1.02		0.94	
Order no. NPT		–		89012		89013		89014		89015		89016		89017		89018	
Order no.		50959		50960		50964		50965		50968		50969		50970		50971	

	Fresh Water	Pool Water	Sea Water	220-240 V	400 V	110-120 V	50 Hz	60 Hz	12 V AC	24 V DC	DMX	DMX/ RDM	Plug and Spray
Comet Prec 20 - 20 Silver	●	●	●	○	○	○	○	○	○	○	○	○	○

Comet Prec 20 - 20 Silver

The Comet Prec 20 - 20 Silver generates a precise clear, full jet that is stable in the wind.

This nozzle is ideal for the combination with Multi Directional Drive L 2D /DMX/02 (see page 38) and Swivel /DMX/02 (see page 36).

Product characteristics at a glance

- Medium-sized single-jet nozzles
- Fountain heights 1,00m to 20,00m
- Clear wind-stable full jet
- Ideal for the combination with Multi Directional Drive II /DMX/02 and Swivel
- Can be implemented as a single fountain or in groups
- Water-level independent
- With flow director

Comet Prec 20 - 20 Silver

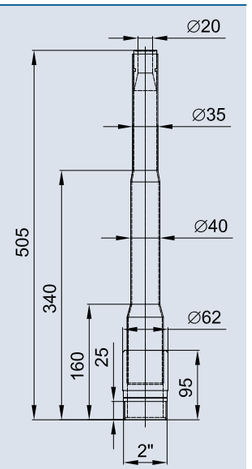

Comet Prec 20 - 20 Silver			
Dimensions (Ø x H) [mm]		62 x 505	
Fountain height		DWB	DDB
		[l/min]	[bar]
1.00	[m]	90	0.12
1.25	[m]	96	0.14
1.50	[m]	102	0.17
1.75	[m]	110	0.19
2.00	[m]	117	0.22
2.50	[m]	132	0.28
3.00	[m]	147	0.34
3.50	[m]	160	0.40
4.00	[m]	170	0.46
5.00	[m]	206	0.57
6.00	[m]	227	0.69
7.00	[m]	245	0.81
8.00	[m]	263	0.92
9.00	[m]	279	1.04
10.00	[m]	295	1.16
11.00	[m]	309	1.28
12.00	[m]	323	1.40
14.00	[m]	350	1.64
16.00	[m]	385	1.90
18.00	[m]	420	2.15
20.00	[m]	441	2.40
Material		Stainless steel 1.4571/1.4301 (AISI 316 Ti/304)	
Weight	[kg]	1.55	
Order no.			50523

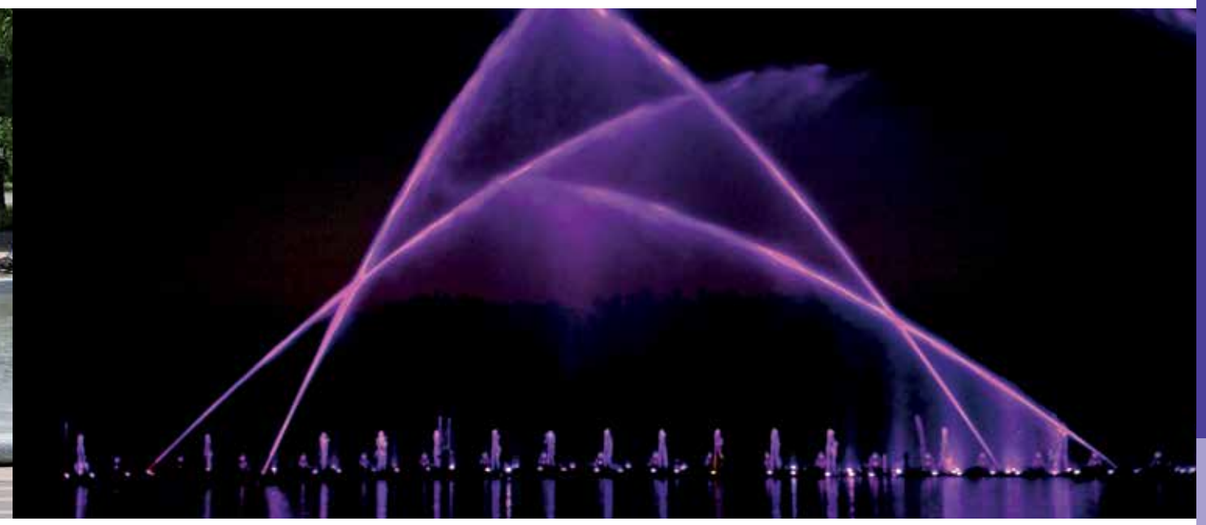

	Fresh Water	Pool Water	Sea Water	220-240 V	400 V	110-120 V	50 Hz	60 Hz	12 V AC	24 V DC	DMX	DMX/ RDM	Plug and Spray
Comet Prec 30 - 30	●	●	●	○	○	○	○	○	○	○	○	○	○

Comet Prec 30 - 30

The Comet Prec 30 - 30 generates a precise clear, full jet that is stable in the wind for fountain heights up to 30 m.

This nozzle is designed for the combination with Multi Directional Drive XL 2D /DMX/02.

Product characteristics at a glance

- Medium – sized single jet nozzle
- Fountain heights 5 m to 30 m
- Clear wind-stable full jet
- Can be implemented as a single fountain or in groups
- Extensive design versatility
- Water-level independent
- With flow director
- Ideal for Multidirectional Drive XL 2D (45076)

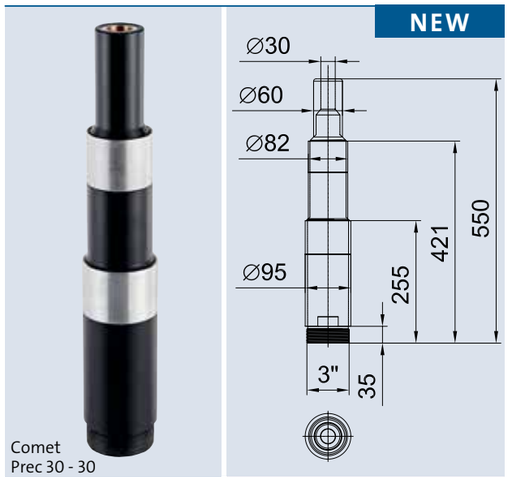

Comet Prec 30 - 30

Comet Prec 30 - 30			
Dimensions (Ø x H) [mm]		95 x 550	
Fountain height		DWB	DDB
		[l/min]	[bar]
5.00	[m]	456	0.67
10.00	[m]	646	1.31
15.00	[m]	806	1.95
20.00	[m]	922	2.53
25.00	[m]	1045	3.30
30.00	[m]	1195	4.30
Material		Plastic / Stainless steel	
Weight	[kg]	4.5	
Order no.			45079

Innovation – made by OASE

Cluster Eco 15 - 38

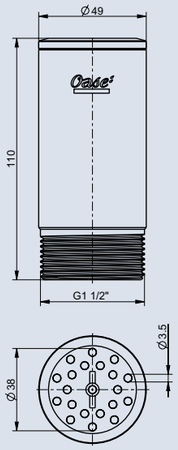

Cluster Eco 15 - 38

	Fresh Water	Pool Water	Sea Water	220-240 V	400 V	110-120 V	50 Hz	60 Hz	12 V AC	24 V DC	DMX	DMX/ RDM	Plug and Spray
Cluster Eco 15 - 38	●	●	●*	○	○	○	○	○	○	○	○	○	○

*Seawater product version on request

Cluster Eco 15 - 38

The Cluster Eco generates from many small single jets one full jet with a diameter of 38 mm.

This energy-saving stainless steel nozzle forms a voluminous water jet with lesser water and is designed for use in fresh water and pool water. Since the nozzle is water level independent and has a 3.5 mm opening, it is suitable for installation in dry decks.

Product characteristics at a glance

- Water saving nozzle, significantly lower water consumption than conventional nozzles
- 21 single jets create one full jet with a jet diameter of 38 mm of up to 10 m
- Integrated water stabilizer with 6 deflecting blades (OASE deflecting blade technology)
- Water level independent
- Sea water Comet Eco Nozzle on request

The particle strainer diameter of the filter must be considered.

Cluster Eco 15 - 38			
Dimensions (Ø x H) [mm]			49 x 110
Fountain height		DWB	DDB
		[l/min]	[bar]
1.00	[m]	56	0.14
2.00	[m]	79	0.26
3.00	[m]	95	0.37
4.00	[m]	111	0.49
5.00	[m]	126	0.60
6.00	[m]	138	0.72
7.00	[m]	148	0.84
8.00	[m]	166	0.90
9.00	[m]	178	1.00
10.00	[m]	190	1.08
Material		Stainless steel 1.4301 (AISI 304)	
Weight	[kg]		0.60
Order no.			45480

Other nozzles on request

Innovation – made by OASE

Cluster Eco 30 - 67 **NEW**

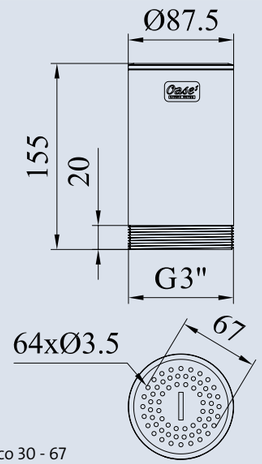

Cluster Eco 30 - 67

	Fresh Water	Pool Water	Sea Water	220-240 V	400 V	110-120 V	50 Hz	60 Hz	12 V AC	24 V DC	DMX	DMX/ RDM	Plug and Spray
Cluster Eco 30 - 67	●	●	●*	○	○	○	○	○	○	○	○	○	○

*Seawater product version on request

Cluster Eco 30 - 67

The Cluster Eco 30 - 67 has a 3" connection and generates from many small single jets one full jet with a diameter of 67 mm.

This energy-saving stainless steel nozzle forms a voluminous water jet with lesser water and is designed for use in fresh water and pool water. Since the nozzle is water level independent and has a 3.5 mm opening, it is suitable for installation in dry decks.

Product characteristics at a glance

- Water saving nozzle, less water consumption than conventional nozzles
- 64 single jets create one full jet with a jet diameter of 67 mm
- Pressure side connection: 3"
- Integrated water stabilizer with deflecting blades (OASE deflecting blade technology)
- Water level independent
- Sea water Cluster Eco Nozzle on request

The particle strainer diameter of the filter must be considered.

Cluster Eco 30 - 67			
Dimensions (Ø x H) [mm]			87.5 x 155
Fountain height		DWB	DDB
		[l/min]	[bar]
1.00	[m]	150	0.14
2.00	[m]	216	0.25
3.00	[m]	269	0.35
4.00	[m]	316	0.47
5.00	[m]	362	0.61
6.00	[m]	398	0.73
7.00	[m]	438	0.86
8.00	[m]	474	0.98
9.00	[m]	507	1.11
10.00	[m]	534	1.25
Material		Stainless steel 1.4301 (AISI 304)	
Weight	[kg]		2.3
Order no.			51882

Other nozzles on request

Nozzles
Classic

	Fresh Water	Pool Water	Sea Water
50966 Hollow Jet nozzle 68	●	●	○
50973 Hollow Jet nozzle 100	●	●	○
55350 Hollow Jet nozzle 130	●	●	○
50963 Hollow Jet nozzle 130	●	●	●

Hollow Jet nozzles

Imposing fountains up to 80 m in height are shot high into the sky by OASE Hollow Jet nozzles.

The special nozzles for impressive fountain heights work independently of the water level, and with flow straightener. Thanks to these features and the precise manufactoring of the ring slot of the nozzle, a stable fountain jet is ensured at all times.

In comparison to full-jet nozzles, the sophisticated design of the Hollow Jet nozzle allows for a significant reduction of water demand (also referred to as volume flow).

Product characteristics at a glance

- For fountain heights of up to 80 m
- Wind-stable high jet
- Water-level independent
- Significantly reduced water demand compared to full-jet nozzles
- With flow director

50966 Hollow jet nozzle 68 | 50973 Hollow jet nozzle 100 | 55350 / 50963 Hollow jet nozzle 130

The Hollow jet nozzle 130 (50963) consists of a higher quality of stainless steel so that this nozzle is suited for salt water.

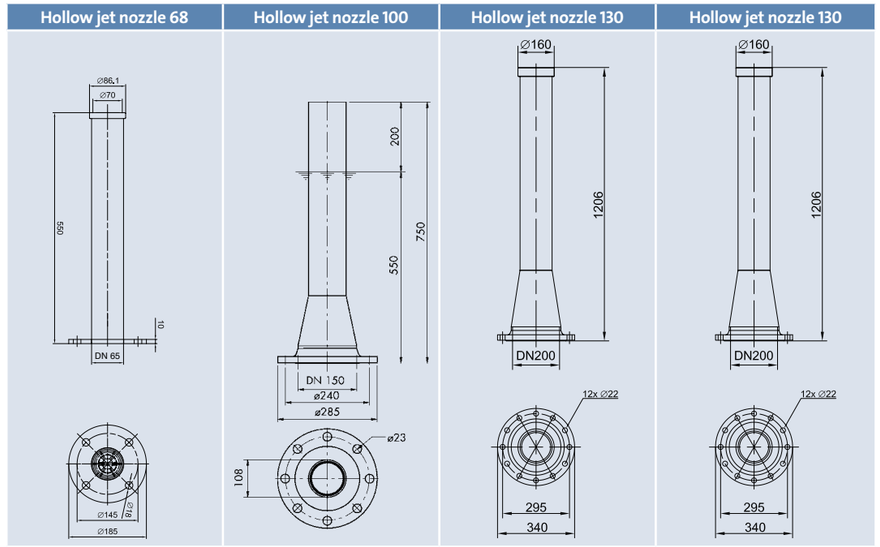

	Hollow jet nozzle 68		Hollow jet nozzle 100		Hollow jet nozzle 130		Hollow jet nozzle 130	
Dimensions (Ø x H) [mm]	80 x 425		285 x 750		320 x 1200		320 x 1200	
Ø Hollow Jet [mm]	70		100		130		130	
Water film thickness [mm]	3.5		4.0		10		10	
Fountain height	DWB	DDB	DWB	DDB	DWB	DDB	DWB	DDB
	[l/min]	[bar]	[l/min]	[bar]	[l/min]	[bar]	[l/min]	[bar]
5 [m]	449	0.61						
6 [m]	493	0.72						
7 [m]	533	0.87						
8 [m]	570	1.00						
9 [m]	605	1.12						
10 [m]	639	1.26						
12 [m]	701	1.53						
14 [m]	759	1.80						
16 [m]	813	2.07						
18 [m]	864	2.35						
20 [m]	912	2.64	1390	2.18				
22 [m]	959	2.93	1475	2.45				
24 [m]	1003	3.22	1561	2.71				
25 [m]			1600	2.85				
30 [m]			1820	3.60				
35 [m]			1985	4.25				
40 [m]			2235	5.80	6828	5.4	6828	5.4
45 [m]			2600	7.20	7290	6.1	7290	6.1
50 [m]			2660	7.70	7735	6.9	7735	6.9
55 [m]					8165	7.7	8165	7.7
60 [m]					8583	8.5	8583	8.5
65 [m]					8990	9.3	8990	9.3
70 [m]					9388	10.2	9388	10.2
75 [m]					9778	11.0	9778	11.0
80 [m]					10160	11.9	10160	11.9
Material	Stainless steel 1.4301 (AISI 304)		Stainless steel 1.4301 (AISI 304)		Stainless steel 1.4301 (AISI 304)		Stainless steel 1.4571 (AISI 316Ti)	
Weight [kg]	5.0		33.0		76.0		76.0	
Order no.	**50966**		**50973**		**55350**		**50963**	

Nozzles
Classic

Geyser Jet 30

High Jet 30

Geyser Jet 30

High Jet 30

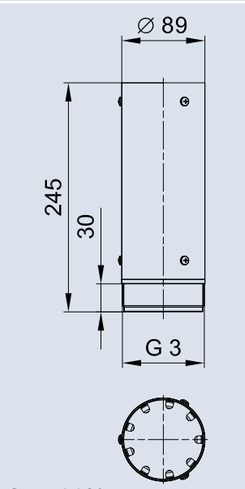

Geyser Jet 30

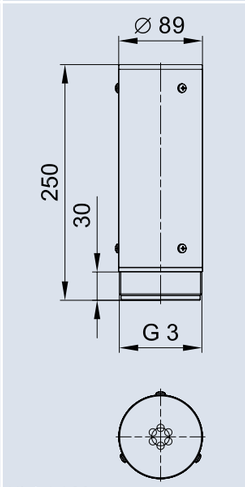

High Jet 30

	Fresh Water	Pool Water	Sea Water	220-240 V	400 V	110-120 V	50 Hz	60 Hz	12 V AC	24 V DC	DMX	DMX/ RDM	Plug and Spray
High Jet 30	●	○	○	○	○	○	○	○	○	○	○	○	○
Geyser Jet 30	●	○	○	○	○	○	○	○	○	○	○	○	○

High Jet / Geyser Jet

These nozzles generate one water jet that is stable in wind.

The High Jet and Geyser Jet are water-level independent with a lightweight design and usually used on the floating fountains.

Product characteristics at a glance

- Water pattern as one water jet
- Water-level independent
- Modern stainless steel look

		Geyser Jet 30		High Jet 30	
Dimensions (Ø x H) [mm]		89 x 245		89 x 250	
Fountain height		DWB	DDB	DWB	DDB
		[l/min]	[bar]	[l/min]	[bar]
5.0	[m]	347	0.81		
6.0	[m]	381	0.98		
7.0	[m]	411	1.14		
8.0	[m]	440	1.31	226	1.15
9.0	[m]	466	1.48	240	1.29
10.0	[m]	492	1.65	253	1.44
11.0	[m]	515	1.82	266	1.59
12.0	[m]	539	1.99	278	1.74
13.0	[m]			289	1.89
14.0	[m]			299	2.04
15.0	[m]			310	2.19
16.0	[m]			320	2.35
Material – casing tube		Stainless steel		Stainless steel	
Material – nozzle insert		POM		POM	
Weight	[kg]	1.4		1.4	
Order no.		50377		50375	

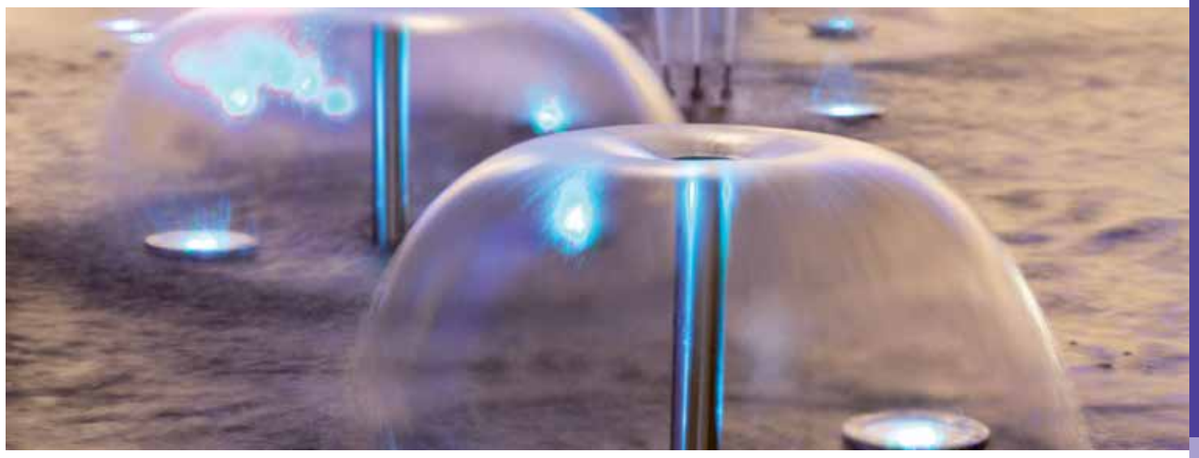

	Fresh Water	Pool Water	Sea Water	220-240 V	400 V	110-120 V	50 Hz	60 Hz	12 V AC	24 V DC	DMX	DMX/ RDM	Plug and Spray
Lava	●	○	○	○	○	○	○	○	○	○	○	○	○

Lava 25 - 5 E to 60 - 10 E

Water bells are the fountain effect producing the least noise. The relaxing sound of splashing water is particularly effective in water gardens, reception halls, or outdoor pools that are protected from wind.

The Lava bell forms a closed water veil that can be attractively staged with underwater illumination.

Product characteristics at a glance

- Transparent water pattern
- Adjustable bell diameter
- Water-level independent
- Low-noise operation
- Modern stainless steel look

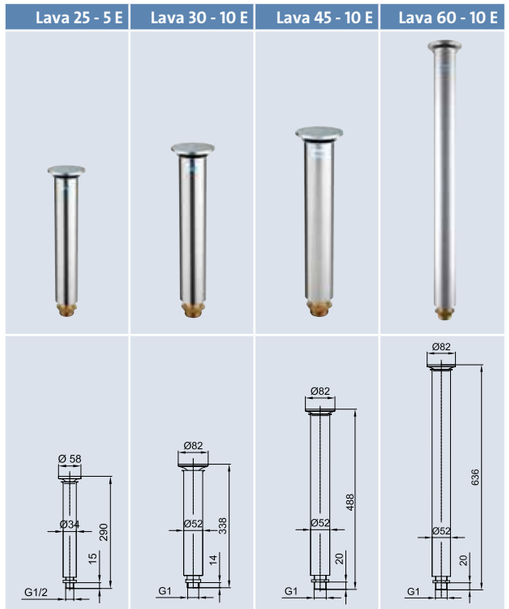

Accessories (must be ordered separately)	Order no.
Sleeve 10 silver (see page 258)	51018
Sleeve 15 silver (see page 258)	51019
Reducing sleeve 15 x 10 (see page 259)	51032
Reducing sleeve 20 x 15 (see page 259)	51030
Adapter G 10 / NPT 10 (see page 258)	51026

		Lava 25 - 5 E		Lava 30 - 10 E		Lava 45 - 10 E		Lava 60 - 10 E	
Dimensions (Ø x H) [mm]		58 x 290		82 x 338		82 x 488		82 x 636	
Fountain diameter		DWB	DDB	DWB	DDB	DWB	DDB	DWB	DDB
		l/min	[bar]	l/min	[bar]	l/min	[bar]	l/min	[bar]
200	[mm]	17	0.09						
300	[mm]	21	0.11	35	0.11				
400	[mm]	25	0.14	43	0.13	43	0.14		
500	[mm]	29	0.17	51	0.16	51	0.17	51	0.18
600	[mm]	33	0.21	59	0.20	59	0.21	59	0.22
700	[mm]			67	0.25	67	0.26	67	0.27
900	[mm]					75	0.32	75	0.33
1100	[mm]							83	0.40
Material		Stainless steel 1.4301 (AISI 304)							
Weight	[kg]	0.6		1.3		1.6		1.8	
Order no.		50884		50889		50890		50891	

Water sphere

	Fresh Water	Pool Water	Sea Water	220-240 V	400 V	110-120 V	50 Hz	60 Hz	12 V AC	24 V DC	DMX	DMX/ RDM	Plug and Spray
Water sphere	●	○	○	○	○	○	○	○	○	○	○	○	○
Water hemisphere	●	○	○	○	○	○	○	○	○	○	○	○	○

Water spheres 900/37 to 6000/450 E
Water hemispheres H 900/25 to H 6000/248 E

Water hemisphere

The artistic water pattern that is generated by the sphere effect nozzles requires a lot of space in order to unfold its enchanting effect. It lends any location a very special attractive force, even from a distance.

Product characteristics at a glance

- **Sculptural, amazing water pattern**
- **Decorative stainless steel sculpture**
- **Extensively wind-stable**
- **Water-level independent**

The fountain attachments are primarily made of stainless steel which makes them attractive sculptures even if they are not spraying water.

However, their special flair unfolds once the fine waterveil escaping from the uniformly arranged nozzles converges to form a gentle sphere.

Depending on size the spheres consist of a different number of nozzles. Operation of the spheres and hemispheres is even possible in strong wind in spite of the relatively fine water veil.

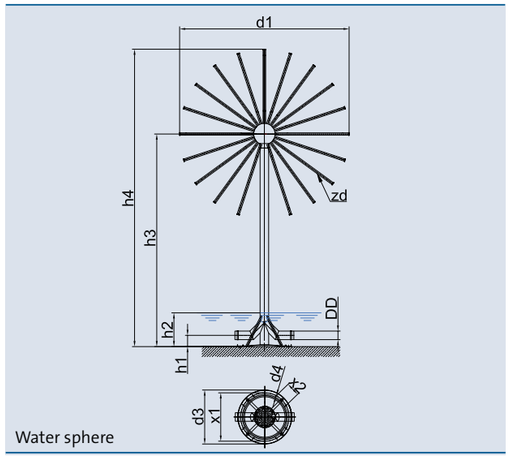

Water sphere

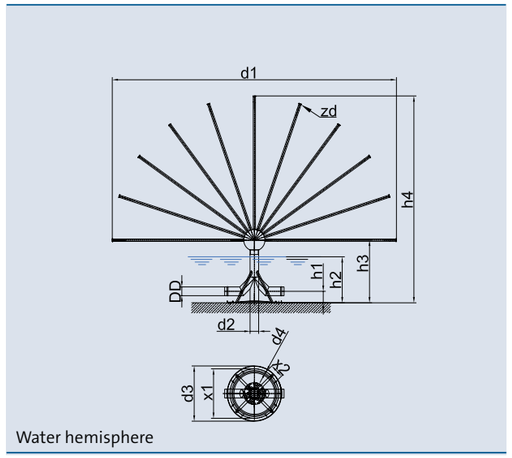

Water hemisphere

Water sphere		900/37 E	1200/79 E	1500/127 E	2500/127 E	3500/380 E	6000/450 E
Dimensions (Ø x H) [mm]		900 x 1800	1200 x 2200	1500 x 2600	2500 x 3600	3500 x 5850	6000 x 9600
zd	[pieces]	37	79	127	127	380	450
DWB	[l/min]	370	790	1270	1270	4180	6750
DDB	[bar]	1.0	1.0	1.1	1.2	1.6	2.0
MBD	[mm]	2000	2500	3000	4500	6000	10000
DD		1 x DN 65	1 x DN 65	2 x DN 65	2 x DN 65	4 x DN 65	6 x DN 100
d1	[mm]	900	1200	1500	2500	3500	6000
d2	[mm]	76	76	76	76	160	220
d3	[mm]	475	475	475	475	1000	1500
d4	[mm]	12	12	12	12	22	26
h1	[mm]	100	100	100	100	100	125
h2	[mm]	300	300	300	400	500	500
h3	[mm]	1350	1600	1850	2350	4100	6600
h4	[mm]	1800	2200	2600	3600	5850	9600
x1	[mm]	430	430	430	430	900	1400
x2	[mm]	123	123	123	123	200	250
Material		Tombac / stainless steel 1.4301 (AISI 304)					
Weight	[kg]	32	56	100	160	1100	3100
Order no.		50894	50895	50896	51759	51760	51761

Water hemisphere		H 900/25 E	H 1200/49 E	H 1500/73 E	H 2500/73 E	H 3500/210 E	H 6000/248 E
Dimensions (Ø x H) [mm]		900 x 950	1200 x 1100	1500 x 1250	2500 x 1850	3500 x 2350	6000 x 3650
zd	[pieces]	25	49	73	73	210	248
DWB	[l/min]	250	490	730	730	2310	3720
DDB	[bar]	0.9	0.9	1.0	1.1	1.3	1.5
MBD	[mm]	1500	2000	2500	3500	5000	9000
DD		1 x DN 65	1 x DN 65	1 x DN 65	1 x DN 65	2 x DN 80	3 x DN 100
d1	[mm]	900	1200	1500	2500	3500	6000
d2	[mm]	76	76	76	76	160	220
d3	[mm]	475	475	475	475	1000	1000
d4	[mm]	12	12	12	12	22	22
h1	[mm]	100	100	100	100	100	125
h2	[mm]	300	300	300	400	500	500
h3	[mm]	500	500	500	600	600	650
h4	[mm]	950	1100	1250	1850	2350	3650
x1	[mm]	430	430	430	430	900	900
x2	[mm]	123	123	123	123	200	200
Material		Tombac / stainless steel 1.4301 (AISI 304)					
Weight	[kg]	25	42	65	100	650	1800
Order no.		50897	50898	50899	51762	51763	51764

Fan Jet

	Fresh Water	Pool Water	Sea Water	220-240 V	400 V	110-120 V	50 Hz	60 Hz	12 V AC	24 V DC	DMX	DMX/ RDM	Plug and Spray
Fan Jet	●	●	●										

Fan Jet 10 - 6 E, 15 - 8 E

The water veil generated by these nozzles not only has a bizarre beauty, it is also extremely practical: It is particularly well suited to conceal exposed technology.

Depending on the installation the fan nozzles generate either a vertically ascending water veil, or a diagonally spouting water veil of 6 or 8 mm in thickness. Thanks to its large surface area the attractive water pattern can conceal a foundation base, or exposed pipe and pump equipment from the eyes of observers. The nozzles work independently of the water level and require a throttle valve to regulate the water pattern.

Product characteristics at a glance

- 6 mm or 8 mm thick, fan-shaped water gushing effect
- Water-level independent
- Modern stainless steel look

Accessories (must be ordered separately)	Order no.
Swivel connection 10 silver (see page 258)	51015
Swivel connection 15 silver (see page 258)	51016
Sleeve 10 silver (see page 258)	51018
Sleeve 15 silver (see page 258)	51019
Swivel ball joint 10 (see page 259)	51165
Adapter G 10 / NPT 10 (see page 258)	51026
Adapter G 15 / NPT 15 (see page 258)	51027
Reducing sleeve 15 x 10 (see page 259)	51032
Reducing sleeve 20 x 15 (see page 259)	51030
Flow Valve 10 (see page 259)	51033

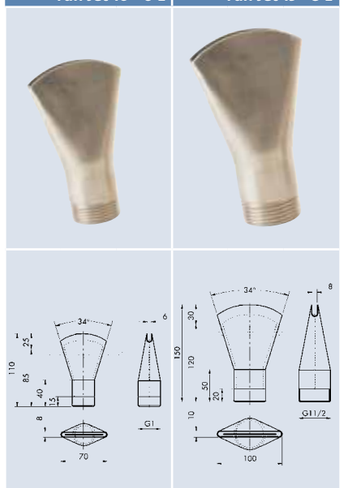

Fan Jet		Fan Jet 10 - 6 E			Fan Jet 15 - 8		
Dimensions (L x B x H) [mm]		110 x 70 x 34			150 x 100 x 49		
Fountain height		SPB	DWB	DDB	SPB	DWB	DDB
		[m]	[l/min]	[bar]	[m]	[l/min]	[bar]
0.25	[m]	0.60	70	0.04			
0.50	[m]	1.00	94	0.06	1.40	143	0.06
0.75	[m]	1.50	116	0.11	1.80	174	0.09
1.00	[m]	2.00	134	0.13	2.80	200	0.11
1.25	[m]	2.80	150	0.16	3.40	223	0.14
1.50	[m]	3.00	165	0.19	4.00	244	0.17
1.75	[m]	3.80	179	0.23	5.00	264	0.20
2.00	[m]				5.50	282	0.25
Material		Stainless steel 1.4571(AISI 316 Ti)					
Weight	[kg]	0.25			0.49		
Order no.		53056			53047		

	Fresh Water	Pool Water	Sea Water	220-240 V	400 V	110-120 V	50 Hz	60 Hz	12 V AC	24 V DC	DMX	DMX/ RDM	Plug and Spray
Fan Jet 30 - 11 E	●	●	●										

Fan Jet 30 - 11 E

The water curtain produced by these nozzles is up to 9 m high and 27.6 m wide and is therefore also suitable as a screen for projectors and lasers.

The absolute highlight, however, is a combination with Multi Directional Drive XL 3D /DMX/02. The large water fan can be rotated and swivelled in any position, thus providing more dynamic water images.

Product characteristics at a glance

- 11 mm thick, fan shaped up to 9 m high and approx. 8 m wide
- Water – level independent
- Modern stainless steel look
- Optimized for operation with Multi Directional Drive XL 3D /DMX/02

Fan Jet 30 - 11 E

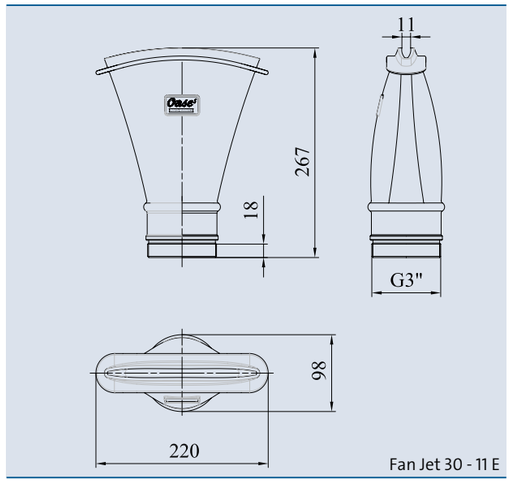

Fan Jet 30 - 11 E

Fan Jet 30 - 11 E				
Dimensions (L x W x H) [mm]		267 x 98 x 220		
Fountain height		SPB	DWB	DDB
		[m]	[l/min]	[bar]
1	[m]	2.40	404	0.14
2	[m]	4.00	611	0.22
3	[m]	7.80	827	0.38
4	[m]	14.00	1015	0.55
5	[m]	17.00	1128	0.63
6	[m]	19.00	1316	0.85
7	[m]	22.60	1457	1.00
8	[m]	26.00	1589	1.15
9	[m]	27.60	1748	1.35
Material		Stainless Steel 1.4408 (AISI 316)		
Weight	[kg]	3.7		
Order no.		46983		

	Fresh Water	Pool Water	Sea Water	220-240 V	400 V	110-120 V	50 Hz	60 Hz	12 V AC	24 V DC	DMX	DMX/ RDM	Plug and Spray
WaterScreenNozzle S	●	●	○	○	○	○	○	○	○	○	○	○	○
WaterScreenNozzle XL	●	●	●	○	○	○	○	○	○	○	○	○	○

WaterScreenNozzle

The WaterScreenNozzle generates a projection screen made of water to display. It can be used a variety of media including Video and Lasers for special events.

The screen is a complete semi-circle with 180° in different heights as a function of flow rate and pressure delivered by the pump system.

Product characteristics at a glance

- **Optimized nozzles for a 180° WaterScreen**
- **Ideal for rear projection of videos and or lasers**
- **An extra flow regulation pipe is not necessary**
- **Water film thickness individually adjustable**

WaterScreenNozzle XL

The nozzle creates a filmy WaterScreen. This qualifies for projection of Laser, Video, Slide and Gobo (Graphical optical blackout) type of illumination. Based on the law of physics of light, the position of the nozzle should always be between the viewer and projector.

NEW

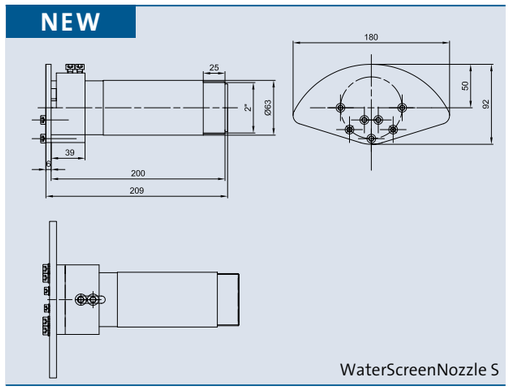

WaterScreenNozzle S

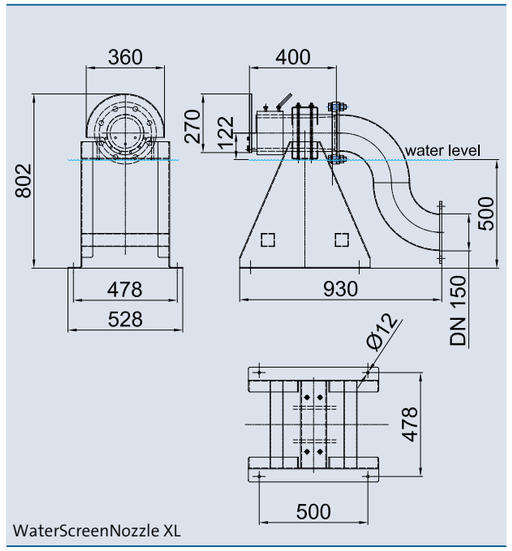

WaterScreenNozzle XL

		WaterScreenNozzle S	WaterScreenNozzle XL
WaterScreen Dimension	[m]	15 x 5	45 x 15
Dimensions (L x W x H)	[mm]	218 x 180 x 92	930 x 528 x 802
DWB	[l/min]	870	4000
DDB	[bar]	6.4	12
Material		Stainless steel 1.4301 (AISI 304)	Stainless steel 1.4571 (AISI 316 Ti)
Weight with bracket	[ap. kg]	3.8	95
Order no.		50480	50481

Grand Vulcan 30

Trumpet Jet 30

Grand Vulcan 30

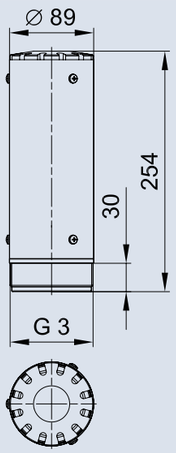

Trumpet Jet 30

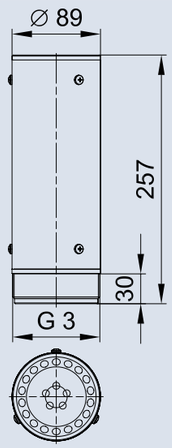

	Fresh Water	Pool Water	Sea Water	220-240 V	400 V	110-120 V	50 Hz	60 Hz	12 V AC	24 V DC	DMX	DMX/ RDM	Plug and Spray
Grand Vulcan 30	●	○	○	○	○	○	○	○	○	○	○	○	○
Trumpet Jet 30	●	○	○	○	○	○	○	○	○	○	○	○	○

Grand Vulcan 30 / Trumpet Jet 30

The Grand Vulcan and Trumpet Jet are multi jet nozzles. The single jets are clear and relatively wind stable.

The single jets of the Grand Vulcan 30 are arranged in a circle. They create a calyx.
The water patter of the Trumpet Jet 30 looks like a calyx with a strong middle water jet.

Product characteristics at a glance

- **Multi jet nozzle**
- **Water-level independent**
- **Modern stainless steel look**

		Grand Vulcan 30		Trumpet Jet 30	
Dimensions (Ø x H) [mm]		89 x 254		89 x 257	
Fountain height		DWB	DDB	DWB	DDB
		[l/min]	bar	[l/min]	bar
3.00	[m]	450	0.45		
3.50	[m]	487	0.53		
4.00	[m]	520	0.61		
4.50	[m]	552	0.68		
5.00	[m]	582	0.76	363	1.00
6.00	[m]	638	0.92	397	1.20
7.00	[m]	689	1.07	429	1.40
8.00	[m]	737	1.23	459	1.68
9.00	[m]			487	1.85
10.00	[m]			513	2.05
Material – casing tube		Stainless steel		Stainless steel	
Material – nozzle insert		POM		POM	
Weight	[kg]	1.6		1.4	
Order no.		50376		50378	

Vulcan 43 - 3 Silver

Vulcan 300 / 19 - 8 Silver

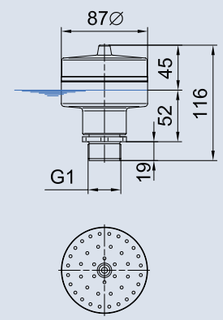

Vulcan 43 - 3 Silver

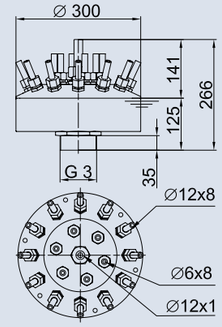

Vulcan 300 / 19 - 8 Silver

	Fresh Water	Pool Water	Sea Water	220-240 V	400 V	110-120 V	50 Hz	60 Hz	12 V AC	24 V DC	DMX	DMX/ RDM	Plug and Spray
Vulcan 43 - 3	●	●	○	○	○	○	○	○	○	○	○	○	○
Vulcan 300 / 19 - 8	●	●	○	○	○	○	○	○	○	○	○	○	○

Vulcan 43 - 3 Silver, 300 / 19 - 8 Silver

Whether small spray fountain or large water features, Vulcan nozzles generate a bundle of jets from 0.5 to 15 m in height that fall in multiple stages. In this configuration the individual jets remain clear and relatively stable in wind.

Product characteristics at a glance

- **Attractive multi-stage water pattern**
- **Precise full jets that are stable in wind**
- **Fountain height is continuously adjustable**
- **With Komet nozzles jet angles can be adjusted as well individually (Vulcan 300 / 19 - 8 Silver)**
- **Water-level independent**
- **Easy to clean**

Accessories (must be ordered separately)	Order no.
Sleeve 10 silver (see page 258)	51018
Sleeve 15 silver (see page 258)	51019
Hexagon nippel 10 silver (see page 258)	51022
Hexagon nippel 30 silver (see page 258)	51025
Swivel connection 10 silver (see page 258)	51015
Adapter G 10 / NPT 10 (see page 258)	51026
Adapter G 30 / NPT 30 (see page 258)	51029

		Vulcan 43 - 3 Silver			Vulcan 300 / 19 - 8 Silver		
Dimensions (Ø x H) [mm]		87 x 116			300 x 266		
Fountain height		DSD	DWB	DDB	DSD	DWB	DDB
		m	[l/min]	bar	m	[l/min]	bar
0.50	[m]	0.40	42	0.10			
0.75	[m]	0.50	50	0.15			
1.00	[m]	0.65	60	0.20			
1.50	[m]	0.80	76	0.30			
2.00	[m]	1.10	90	0.40			
2.50	[m]	1.30	102	0.50			
3.00	[m]	1.50	112	0.60	variab.	339	0.38
3.50	[m]	1.70	121	0.76	variab.	368	0.44
4.00	[m]	2.00	130	0.88	variab.	394	0,50
5.00	[m]				variab.	442	0.64
6.00	[m]				variab.	485	0.77
7.00	[m]				variab.	525	0.90
8.00	[m]				variab.	562	1.03
9.00	[m]				variab.	597	1.16
10.00	[m]				variab.	630	1.29
11.00	[m]				variab.	662	1.42
12.00	[m]				variab.	692	1.56
13.00	[m]				variab.	720	1.69
14.00	[m]				variab.	749	1.82
15.00	[m]				variab.	776	1.96
Material		Double Coated Brass					
Weight	[kg]	1.5			18.5		
Order no.		50766			50977		

Finger nozzle 7 - 15 E

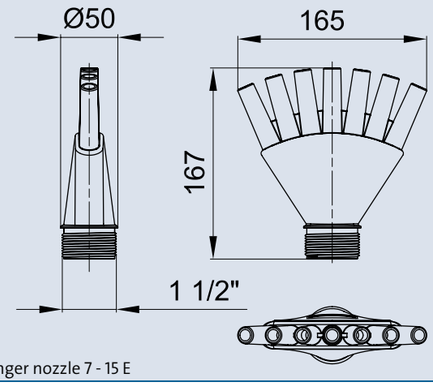

Finger nozzle 7 - 15 E

	Fresh Water	Pool Water	Sea Water	220-240 V	400 V	110-120 V	50 Hz	60 Hz	12 V AC	24 V DC	DMX	DMX/ RDM	Plug and Spray
Finger nozzle 7 - 15 E	●	●	●	○	○	○	○	○	○	○	○	○	○

Finger nozzle 7 - 15 E

The Finger nozzle 7 - 15 E generates seven clear single stream jets.

This stainless steel multi-jet nozzle is suitable for fresh water, pool water and sea water application. The water-level-independent and to a large extent wind stable water jets achieve a max. fountain height of 4 m. Breathtaking and dynamic water patterns can be generated by combining the Finger nozzle 7 - 15 E with the Multi Directional Drive II 3D /DMX/02 (51225).

Product characteristics at a glance

- **7 jet-fountain nozzle**
- **10 mm jet diameter**
- **Wind-stable full jet**
- **Water level-independent**

Accessories (must be ordered separately)	Order no.
Swivel connection 15 silver (see page 258)	51016
Sleeve 15 silver (see page 258)	51019
Adapter G 15 / NPT 15 (see page 258)	51027
Reducing sleeve 15 x 10 (see page 259)	51032
Reducing sleeve 20 x 15 (see page 259)	51030

Finger nozzle 7 - 15 E				
Fountain height		DSD	DWB	DDB
		[m]	[l/min]	[bar]
1.00	[m]	2.70	150	0.10
2.00	[m]	4.70	200	0.21
3.00	[m]	5.20	250	0.35
4.00	[m]	7.40	300	0.48

DSD = Nozzle spray diameter DWB = Nozzle water demand
DDB = Nozzle pressure demand

Finger nozzle 7 - 15 E		
Dimensions (L x W x H)	[mm]	167 x 165 x 50
outlet orifice	[mm]	7 x 10
inlet diameter	[inch]	1½
Water jet height up to	[m]	4
Material		Stainless steel 1.4404 (AISI 316L)
Weight	[kg]	1.6
Order no.		51110

Gushing nozzle

	Fresh Water	Pool Water	Sea Water	220-240 V	400 V	110-120 V	50 Hz	60 Hz	12 V AC	24 V DC	DMX	DMX/ RDM	Plug and Spray
Gushing nozzle	●	●	○	○	○	○	○	○	○	○	○	○	○

Gushing nozzle 115-15 Silver

Whether as single nozzle or as group arranged around a central nozzle – the gushing nozzle generates a full water pattern of impressive presence.

The gushing nozzle spouts a fan-shaped water surge that is mostly closed, with a thickness of 6 mm and a radiating angle of approximately 30°.

Product characteristics at a glance

- **Striking water pattern**
- **Extensively wind-stable**
- **Water-level independent**
- **Durable chrome and nickel plated brass**

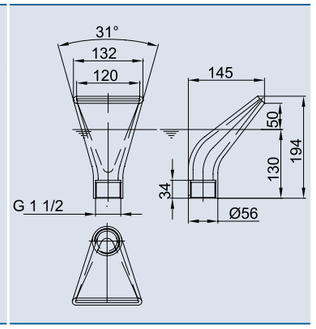

Accessories (must be ordered separately)	Order no.
Swivel connection 10 silver (see page 258)	51015
Swivel connection 15 silver (see page 258)	51016
Sleeve 10 silver (see page 258)	51018
Sleeve 15 silver (see page 258)	51019
Swivel ball joint 10 (see page 259)	51165
Adapter G 10 / NPT 10 (see page 258)	51026
Adapter G 15 / NPT 15 (see page 258)	51027
Reducing sleeve 15 x 10 (see page 259)	51032
Reducing sleeve 20 x 15 (see page 259)	51030
Flow Valve 10 (see page 259)	51033

Gushing nozzle 115-15 Silver					
Dimensions (L x W x H)	[mm]	132 x 145 x 194			
Parabola width PW		PH	SPB	DWB	DDB
		[m]	[m]	[L/min.]	[bar]
0.50	[m]	0.10	0.25	94	0.04
0.75	[m]	0.15	0.33	112	0.06
1.00	[m]	0.20	0.42	131	0.08
1.25	[m]	0.26	0.50	150	0.10
1.50	[m]	0.33	0.58	168	0.12
1.75	[m]	0.40	0.67	187	0.14
2.00	[m]	0.48	0.75	205	0.15
2.50	[m]	0.62	0.92	243	0.19
3.00	[m]	0.77	1.08	280	0.23
3.50	[m]	0.92	1.25	317	0.27
4.00	[m]	1.06	1.42	354	0.31
4.50	[m]	1.21	1.58	392	0.34
Material		Double coated brass			
Weight	[kg]	2.5			
Order no.		50767			

	Fresh Water	Pool Water	Sea Water	220-240 V	400 V	110-120 V	50 Hz	60 Hz	12 V AC	24 V DC	DMX	DMX/ RDM	Plug and Spray
Rotating nozzle	●	○	○	○	○	○	○	○	○	○	○	○	○

Rotating nozzle 5 - 15 E and 5-30E

Gracefully dancing fountains optimally enliven any water landscape and reach heights of up to 10 m.

Gentle rotating water patterns are generated by the recoil of the diagonally set nozzle pipes. With this rotating nozzle, 5 Comet nozzles that can be adjusted in all directions, rotate in a circle and creates a wide variety of wind-stable water pattern.
The ball bearing rotation mechanism ensures continuous trouble-free operation.

Product characteristics at a glance

- **Rotating screw-shaped water pattern**
- **Precise full-jets**
- **Water-level independent**

5 - 15 E

5 - 30 E

Accessories (must be ordered separately)	Order no.
Hexagon nippel 30 silver (see page 258)	51025
Adapter G 15 / NPT 15 (see page 258)	51027
Adapter G 30 / NPT 30 (see page 258)	51029

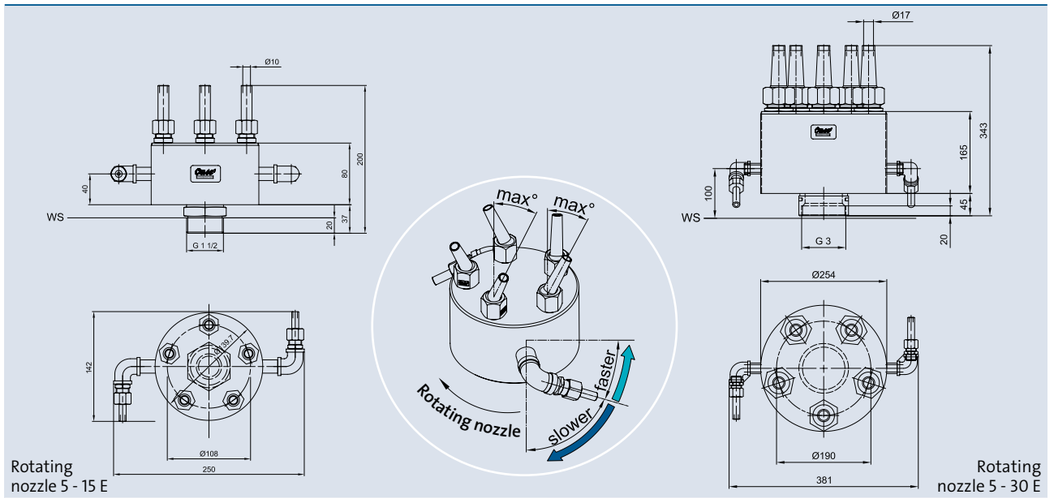

Rotating nozzle 5 - 15 E

Rotating nozzle 5 - 30 E

Rotating nozzle 5 - 15 E				
Dimensions (L x W x H) [mm]		250 x 142 x 200		
Max. Fountain height		SPB [m]	DWB [l/min]	DDB [bar]
1.00	[m]	2.0	141	0.25
1.25	[m]	2.4	158	0.31
1.50	[m]	3.1	173	0.38
1.75	[m]	3.5	187	0.44
2.00	[m]	4.0	199	0.50
2.50	[m]	4.4	223	0.63
3.00	[m]	5.0	244	0.76
3.50	[m]	5.6	264	0.89
4.00	[m]	6.0	282	1.01
Material		Stainless steel / Double coated brass		
Weight	[kg]	2.88		
Order no.		50967		

Rotating nozzle 5 - 30 E				
Dimensions (L x W x H) [mm]		381 x 254 x 343		
Max. Fountain height		SPB [m]	DWB [l/min]	DDB [bar]
1.00	[m]	var.	330	0.15
2.00	[m]	var.	500	0.30
3.00	[m]	var.	630	0.50
4.00	[m]	var.	740	0.60
5.00	[m]	var.	790	0.75
6.00	[m]	var.	875	0.90
7.00	[m]	var.	980	1.10
8.00	[m]	var.	1050	1.30
9.00	[m]	var.	1110	1.50
10.00	[m]	var.	1170	1.60
Material		Stainless steel / Double coated brass		
Weight	[kg]	17.5		
Order no.		50473		

	Fresh Water	Pool Water	Sea Water	220-240 V	400 V	110-120 V	50 Hz	60 Hz	12 V AC	24 V DC	DMX	DMX/ RDM	Plug and Spray
Schaumsprudler 35 - 10 E / 55 - 10 E / 55 - 15 E	●	○	○	○	○	○	○	○	○	○	○	○	○
Schaumsprudler 75 - 20 Silver	●	●	○	○	○	○	○	○	○	○	○	○	○

Schaumsprudler 35 - 10 E to 75 - 20 Silver

The lively bubbling water pattern generated by the foam effect nozzles is the optimal accessory for watercourse inlets, stepped pool installations, or fountain installations with a water reservoir at a lower level.

By mixing air with water, the pattern appears to be extremely high-volume. Nevertheless the nozzles actually have a low water requirement. The beautiful soft foam jet offers a strong contrast to its environment.

As opposed to Cascade and Geyser nozzles, Schaumsprudler nozzles work independently of the water level so that fluctuations in the water level do not affect the water pattern.

Product characteristics at a glance

- High-contrast, lively water pattern
- Foam / spume effect
- Trouble-free continuous operation
- Offers oxygen enrichment
- Extensively wind-stable
- Water-level independent

35 - 10 E

55 - 10 E

55 - 15 E

75 - 20 Silver

Accessories (must be ordered separately)	Order no.
Swivel connection 10 silver (see page 258)	51015
Swivel connection 15 silver (see page 258)	51016
Swivel connection 20 silver (see page 258)	51017
Sleeve 10 silver (see page 258)	51018
Sleeve 15 silver (see page 258)	51019
Sleeve 20 silver (see page 258)	51020

Accessories (must be ordered separately)	Order no.
Adapter G 10 / NPT 10 (see page 258)	51026
Adapter G 15 / NPT 15 (see page 258)	51027
Adapter G 20 / NPT 20 (see page 258)	51028
Reducing sleeve 15 x 10 (see page 259)	51032
Reducing sleeve 20 x 15 (see page 259)	51030
Swivel ball joint 10 (see page 259)	51165

Schaumsprudler 35 - 10 E

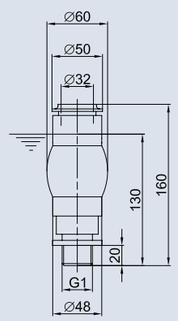

Schaumsprudler 55 - 10 E

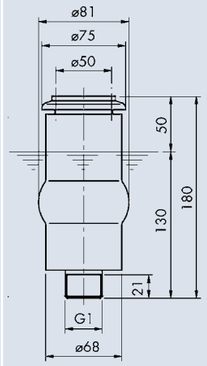

Schaumsprudler 55 - 15 E

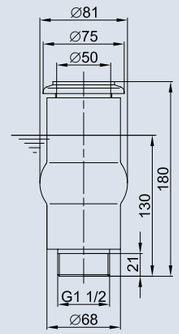

Schaumsprudler 75 - 20 Silver

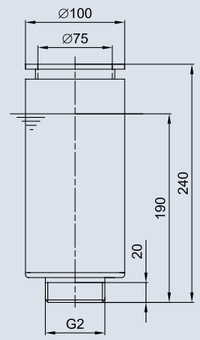

		Schaumsprudler 35 - 10 E		Schaumsprudler 55 - 10 E		Schaumsprudler 55 - 15 E		Schaumsprudler 75 - 20 Silver	
Dimensions (Ø x H) [mm]		60 x 160		81 x 180		81 x 180		100 x 240	
Fountain height		DWB	DDB	DWB	DDB	DWB	DDB	DWB	DDB
		[l/min]	bar	[l/min]	bar	[l/min]	bar	[l/min]	bar
0.25	[m]	47	0.10	60	0.11				
0.50	[m]	55	0.14	84	0.21	125	0.11		
0.75	[m]	71	0.22	108	0.32	151	0.15		
1.00	[m]	80	0.28	122	0.40	176	0.19	328	0.20
1.25	[m]	89	0.34	134	0.49	198	0.24	367	0.24
1.50	[m]	97	0.40	145	0.58	217	0.28	401	0.29
1.75	[m]	104	0.46	156	0.66	235	0.33	433	0.34
2.00	[m]	111	0.52	166	0.75	252	0.38	463	0.39
2.50	[m]	123	0.65	184	0.92	282	0.48	518	0.49
3.00	[m]			200	1.09	310	0.58	567	0.58
3.50	[m]			216	1.27	335	0.67	612	0.68
4.00	[m]					359	0.77	655	0.78
4.50	[m]					381	0.87	695	0.87
5.00	[m]					402	0.97	733	0.97
6.00	[m]					441	1.16	803	1.17
7.00	[m]					477	1.36	868	1.33
8.00	[m]							928	1.56
9.00	[m]							965	1.75
10.00	[m]							1039	1.95
Material		Stainless steel 1.4301 (AISI 304)		Stainless steel 1.4571 (AISI 316Ti) / Brass				Double coated brass	
Weight	[kg]	0.5		1.2		1.4		4.3	
Order no.		50984		50986		50987		50768	

Nozzles
Classic

Schaumsprudler 35 - 10 E

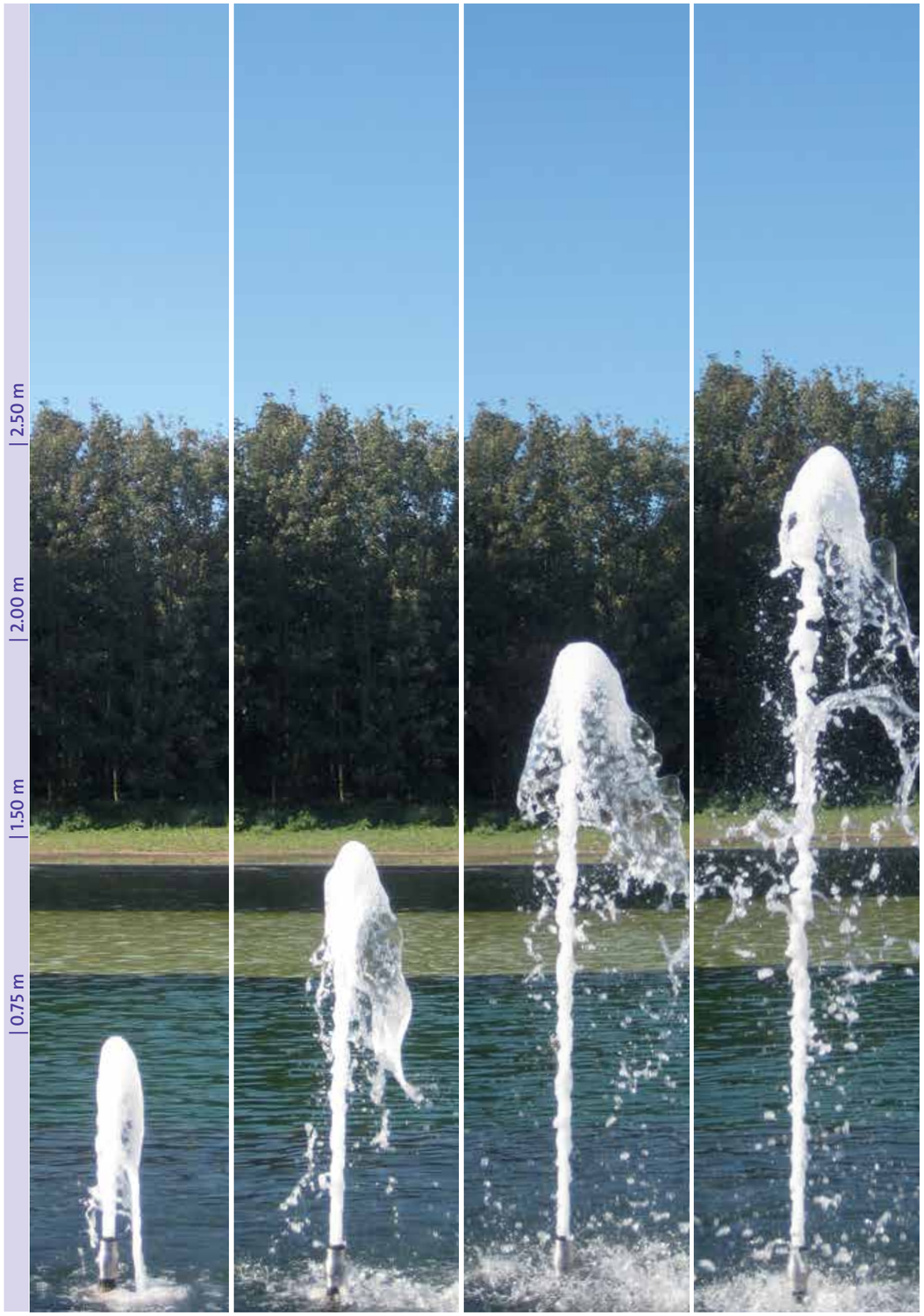

Nozzles
Classic

	Fresh Water	Pool Water	Sea Water	220-240 V	400 V	110-120 V	50 Hz	60 Hz	12 V AC	24 V DC	DMX	DMX/ RDM	Plug and Spray
Cascade	●	○	○	○	○	○	○	○	○	○	○	○	○

Cascade 50 T to Cascade 130 T

These injector nozzles generate a lively full water pattern that changes depending on the water level and accentuates every public area.

Thanks to the injector effect, water and air are suctioned in, mixed intensively and accelerated into the air by the injector jet as an impressive soft flowing fountain. In this process a voluminous fountain that forms a point is generated with relatively low pump capacities.

The foam effect nozzles work depending on the water level; they generate a slender and higher water pattern if the normal water level is not reached. If the normal water level is exceeded the water pattern is fuller and lower. This effect is particularly interesting when there are strong wave movements; then the fountains really start to dance. In installations with a different water level, non-return valves should be provided, otherwise the water level will drop to injector height once the installation is switched off.

Product characteristics at a glance

- Lively water effect
- Foam/spume effect
- Offers oxygen enrichment
- Adjusting flange for alignment
- Water pattern is water-level dependent

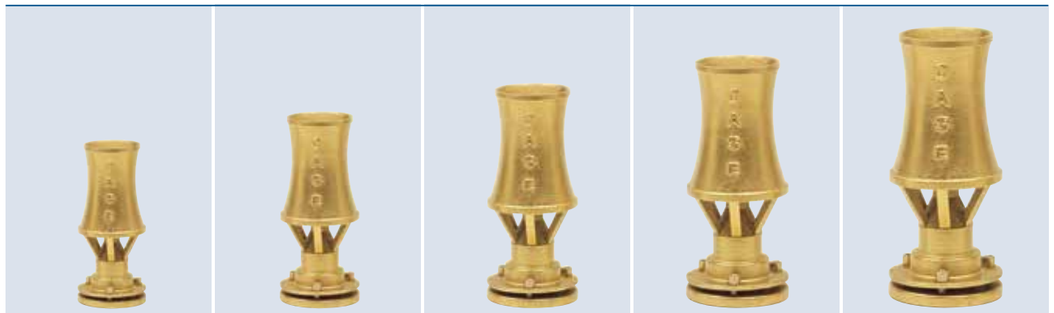

Cascade 50 T | Cascade 70 T | Cascade 90 T | Cascade 110 T | Cascade 130 T

Cascade 50 T	Cascade 70 T	Cascade 90 T	Cascade 110 T	Cascade 130 T
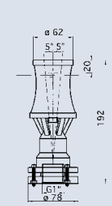	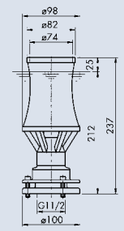	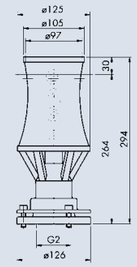	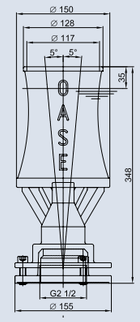	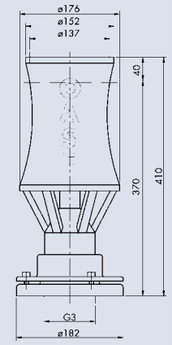

	Cascade 50 T		Cascade 70 T		Cascade 90 T		Cascade 110 T		Cascade 130 T	
Dimensions (Ø x H) [mm]	78 x 192		100 x 237		125 x 294		149 x 346		176 x 410	
Fountain height	DWB	DDB	DWB	DDB	DWB	DDB	DWB	DDB	DWB	DDB
	[l/min]	bar	[l/min]	bar	[l/min]	bar	[l/min]	bar	[l/min]	bar
0.25 [m]	28	0.18								
0.50 [m]	34	0.26	79	0.27						
0.75 [m]	39	0.33	88	0.33	141	0.27				
1.00 [m]	43	0.41	97	0.40	157	0.33	236	0.36	379	0.36
1.50 [m]	51	0.57	111	0.53	184	0.46	279	0.48	437	0.48
2.00 [m]	58	0.73	124	0.66	208	0.58	317	0.60	488	0.60
2.50 [m]	69	1.04	136	0.79	229	0.71	351	0.72	534	0.72
3.00 [m]	74	1.20	147	0.92	249	0.83	382	0.84	577	0.84
4.00 [m]	79	1.36	166	1.18	284	1.08	437	1.07	654	1.07
5.00 [m]	88	1.68	184	1.44	315	1.34	486	1.34	723	1.34
6.00 [m]			200	1.71	344	1.59	531	1.55	786	1.55
7.00 [m]			215	1.97	370	1.85	572	1.79	845	1.79
8.00 [m]					395	2.10	611	2.04	900	2.04
10.00 [m]					441	2.61	682	2.52	1001	2.52
12.00 [m]							747	3.01	1094	3.01
14.00 [m]							806	3.50	1180	3.50
16.00 [m]									1260	3.99
18.00 [m]									1336	4.49
20.00 [m]									1408	4.99
Material	Tombac									
Weight [kg]	1.6		2.4		3.6		7.0		11.0	
Order no. NPT	89051		89052		89053		89054		89055	
Order no.	50911		50912		50915		50916		50917	

Cascade 130 T

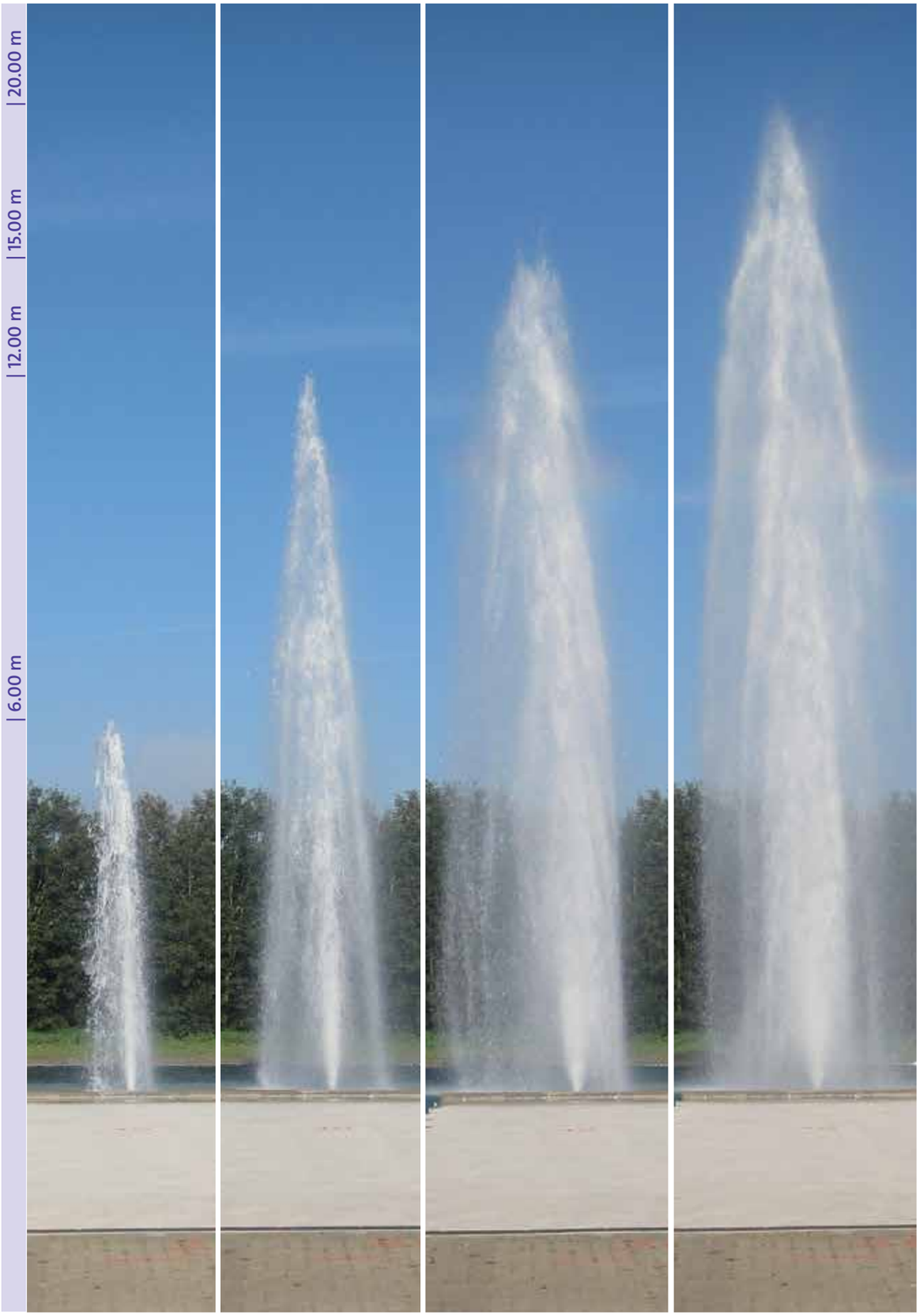

	Fresh Water	Pool Water	Sea Water	220-240 V	400 V	110-120 V	50 Hz	60 Hz	12 V AC	24 V DC	DMX	DMX/ RDM	Plug and Spray
Geyser	●	○	○	○	○	○	○	○	○	○	○	○	○

Geyser 20 T to Geyser 100 T

Like the Cascade nozzles, these injector nozzles also generate a water pattern that changes depending on water level, however the Geyser foam effect nozzles generate a slender, more cylindrical shaped fountain.

Thanks to the injector effect water and air are suctioned in, mixed intensively and accelerated into the air by the injector jet as an impressive soft flowing fountain. In this process a voluminous fountain is generated using relatively low pump capacities.

The foam effect nozzles that work depending on the water level generate a slender and higher water pattern if the normal water level is not reached. If the normal water level is exceeded the water pattern is fuller and lower. This effect is particularly interesting when there are strong wave movements; then the fountains really start to dance.
In installations with a different water level, non-return valves should be provided, otherwise the water level will drop to injector height once the installation is switched off.

Product characteristics at a glance

- Lively water effect
- Foam / spume effect
- Offers oxygen enrichment
- Adjusting flange for alignment
- Water pattern is water-level dependent

Geyser 20 T

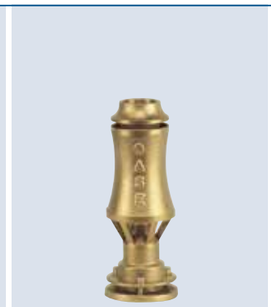

Geyser 40 T

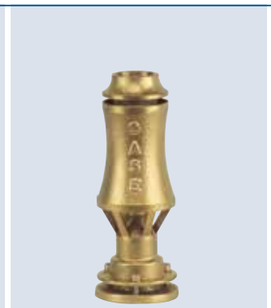

Geyser 60 T

Geyser 100 T

Geyser 20 T	Geyser 40 T	Geyser 60 T	Geyser 100 T
	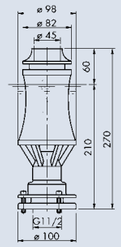	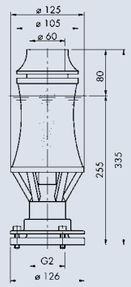	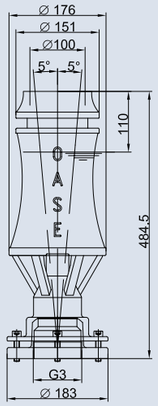

	Geyser 20 T		Geyser 40 T		Geyser 60 T		Geyser 100 T	
Dimensions (Ø x H) [mm]	78 x 227		98 x 270		125 x 335		182 x 480	
Fountain height	DWB	DDB	DWB	DDB	DWB	DDB	DWB	DDB
	[l/min]	bar	[l/min]	bar	[l/min]	bar	[l/min]	bar
0.50 [m]	30	0.20	82	0.27	128	0.24		
0.75 [m]	33	0.25	89	0.31	140	0.29		
1.00 [m]	37	0.30	95	0.35	151	0.34		
1.50 [m]	42	0.39	105	0.43	171	0.43		
2.00 [m]	47	0.49	115	0.52	189	0.53	459	0.56
2.50 [m]	52	0.59	124	0.60	205	0.62	497	0.66
3.00 [m]	56	0.69	133	0.69	220	0.72	532	0.75
4.00 [m]	64	0.89	149	0.86	247	0.91	596	0.94
5.00 [m]	71	1.08	163	1.03	272	1.09	653	1.13
6.00 [m]	77	1.28	176	1.20	295	1.29	707	1.33
7.00 [m]			188	1.38	316	1.57	757	1.52
8.00 [m]			199	1.55	336	1.67	803	1.71
10.00 [m]					373	2.06	890	2.10
12.00 [m]					407	2.44	969	2.49
14.00 [m]							1043	2.89
16.00 [m]							1112	3.28
18.00 [m]							1178	3.68
20.00 [m]							1240	4.08
25.00 [m]							1386	5.09
30.00 [m]							1519	6.12
Material	Tombac							
Weight [kg]		1.5		3.2		5.3		16.2
Order no. NPT		89023		89024		89025		89027
Order no.		50991		50992		50993		50995

Geyser 100 T

Nozzles
Classic

	Fresh Water	Pool Water	Sea Water	220-240 V	400 V	110-120 V	50 Hz	60 Hz	12 V AC	24 V DC	DMX	DMX/ RDM	Plug and Spray
Mylar Lace	●	○	○	○	○	○	○	○	○	○	○	○	○

Mylar Lace Fountains Systems

OASE-mylar lace fountain systems represent an interesting design element in fountain technology. As the water is running noiselessly and nearly without splashing downwards along the special mylar laces, many possible applications are possible.

Indoors the mylar lace fountain can divide a room or form a glittering curtain as an architectural feature.
OASE mylar fountains basically consist of a bottom water reservoir and a top water distribution system with a multitude of mylar nozzles and the corresponding number of adjustable transparent mylar laces. The water reservoir comprises the complete technology - such as pump, overflow drain, freshwater refill, power supply, the mylar lace conduction plate and the underwater lights.

The OASE accessory program also offers other components like a water treatment with the installation of water softener, filtering and dosing plant.

Product characteristics at a glance

- Attractive design concept
- Remarkable room divider
- Effective room humidifier

Mylar Lace Fountains Systems

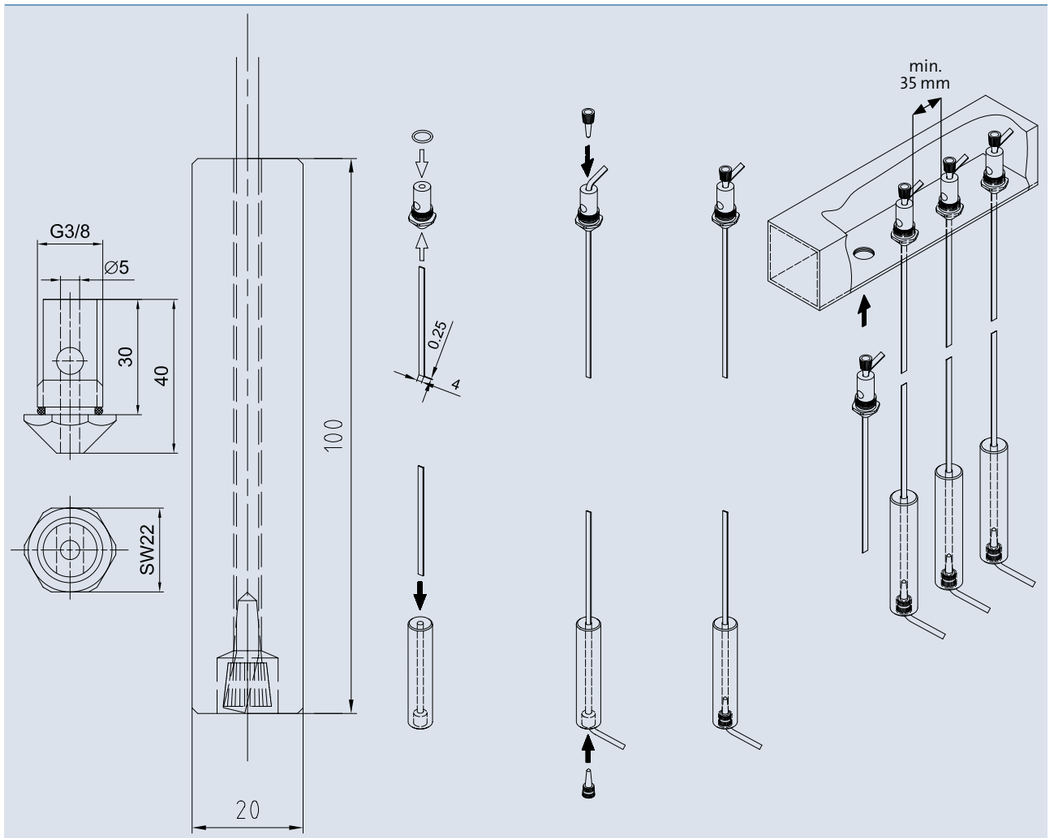

Mylar Lace Fountains Systems

		Mylar lace nozzle 22 MS	Mylar lace 4/025	Mylar lace weight 20/100 MS
Dimensions (L x W x H)	[mm]	22 x 22 x 40	4 x 0.25 x 150000	20 x 20 x 100
Nozzle water requirement	[l/min]	0.5	–	–
Material		Brass	Mylar lace	Brass
Weight	[kg]	0.1	0.207	0.2
Order no.		52218	52219	52220

Floating fountains

Floating fountains are attractive eye-catchers for every body of water. Imposing water patterns and effects are generated with interchangeable nozzles and LEDs. Thanks to uncomplicated installation, floating fountains can be used in a variety of ways. A solid foundation is not necessary, as they operates even with fluctuating water levels and different water depths. Floating fountains captivate with exciting fountain effects and light shows – however this versatile technology has even more to offer. Through floating aeration units, oxygen gets into the water and this contributes to an effective biological balance.

FLOATING FOUNTAINS

108 PondJet / PondJet Eco
110 MIDI II / MAXI II
112 Fountain attachments
114 Illumination sets

Floating fountains

New products

Floating fountains | illumination systems

Page 114 **Floating fountain illumination set RGB**

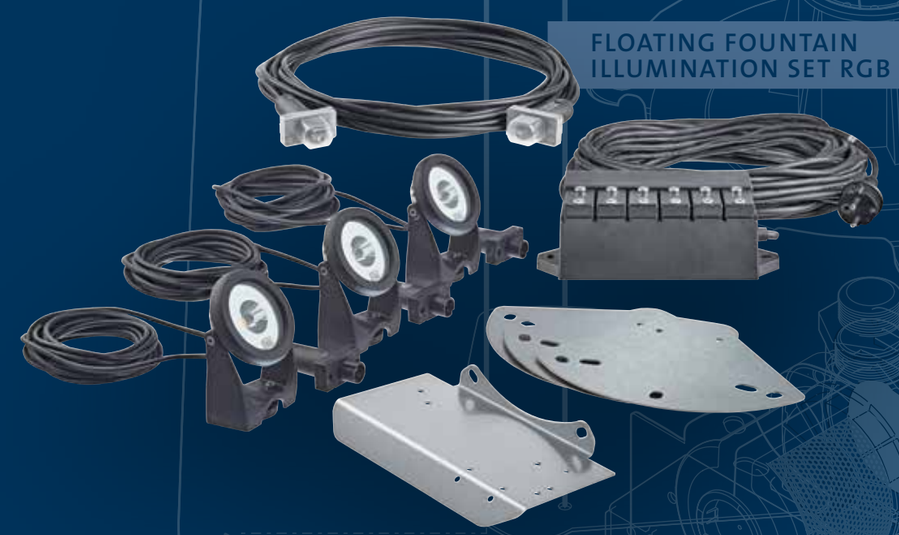

PondJet Eco with PondJet nozzle

PondJet Eco with **Vulcan 43 - 3 Silver**

	Fresh Water	Pool Water	Sea Water	220-240 V	400 V	110-120 V	50 Hz	60 Hz	12 V AC	24 V DC	DMX	DMX/ RDM	Plug and Spray
PondJet Eco	●	○	○	●	○	○	●	●	○	○	○	○	○
PondJet	●	○	○	○	○	●	○	●	○	○	○	○	○

PondJet / PondJet Eco

Thanks to the PondJet floating fountain pump, decorative fountains can easily and quickly be achieved without any complex installation.

Neither the depth of the water, nor a pond base that is very dirty or difficult to access are of significance here. Perfect for use at short notice.

Product characteristics at a glance

- **Ready-to-connect complete aggregate, consisting of pump, float element, and PondJet-nozzle with 1"-thread**
- **Clearly structured fountain height and spray diameter of 3 m**
- **Minimum water depth in clear water is 1 m; for a muddy pond floor the minimum depth is 1.5 m**
- **Lighting set and additional nozzle patterns are available as accessories**

Innovation – made by OASE

PondJet Eco

Pump performance curve

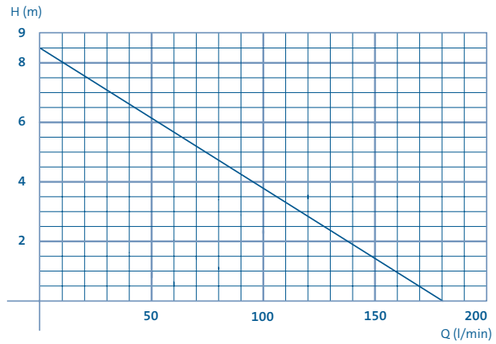

PondJet-nozzle
with 1" thread, cover plate and plug. The 1" thread allows 25 mm / 1" fountain attachments to be attached on the multifunction nozzle of the PondJet.

Dynamic function
The dynamic function can be activated by a switch. Thus attractive water patterns with different fountain heights are produced. This function enables an average reduction in power consumption of 105 W.

Connection possibility
for the underwater transformer of the lighting set available as an accessory.

1"-thread with nozzle
Here, as an example with a mounted Schaumsprudler 35 - 10 E.

Illumination Set
The optional spotlight sets illuminate the different water patterns in glorious white or coloured light.

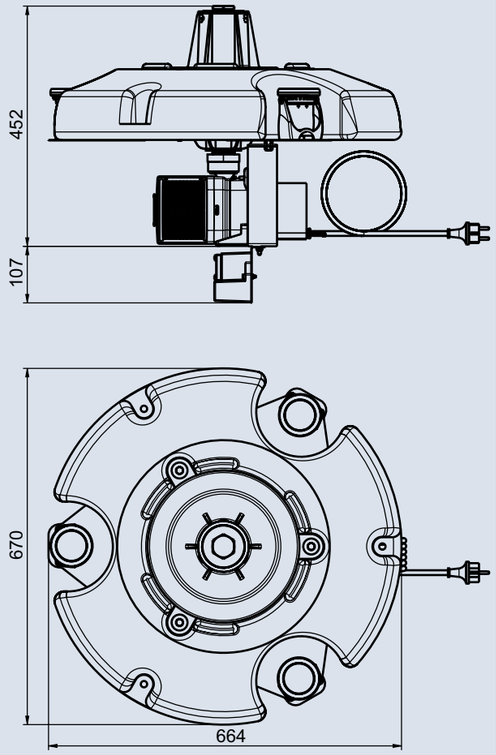

PondJet Eco LED

Accessories (must be ordered separately (57704))	Order no.
Schaumsprudler 35 - 10 E (see page 90)	50986
Vulcan 43 - 3 Silver (see page 85)	50766
Floating fountain illumination set RGB (see page 114)	42641
LED-floating fountain illumination white (see page 114)	42637

Accessories (must be ordered separately (54019))	Order no.
Schaumsprudler 35 - 10 E (see page 90)	50986
Vulcan 43 - 3 Silver (see page 85)	50766
Illumination Set PondJet (see page 114)	51071

PondJet Eco		
Dimensions (Ø x H)	[mm]	670 x 540
Rated voltage	[V/Hz]	220 - 240 / 50 / 60
Power consumption	[W]	190
Flow rate max.	[l/min.]	180
Flow rate max.	[l/h]	10800
Head height max.	[m]	8.5
Pressure-side connection	[inch]	G 1
Fountain height max.	[m]	3.0
Filter surface area	[cm²]	420
Cable length	[m]	20.0
Weight	[kg]	15.20
Order no.		57704

PondJet		
Dimensions (Ø x H)	[ft]	2.2 x 1.8
Operating voltage	[V/Hz]	110-120 / 60
Power consumption	[W/A]	260 / 2.2
Flow rate max.	[gpm]	40
Flow rate max.	[gph]	2400
Head height max.	[ft]	28
Pressure-side connection	[inch]	G 1
Spray height max.	[ft]	10
Spray width max.	[ft]	10
Cable length	[ft]	75
Weight	[lbs.]	16.8
Order no.		54019

	Fresh Water	Pool Water	Sea Water	220-240 V	400 V	110-120 V	50 Hz	60 Hz	12 V AC	24 V DC	DMX	DMX/ RDM	Plug and Spray
MIDI II 1.1 kW / 230 V	●	○	○	●	○	○	●	○	○	○	○	○	○
MAXI II 4.0 kW / 400 V	●	○	○	○	●	○	●	○	○	○	○	○	○

Floating fountain MIDI II / MAXI II

Product characteristics at a glance

- Models from 1.1 to 4.0 KW
- Complete, ready-to-connect fountain in different motor power ranges
- Four easy-change nozzle patterns with 3" standard threads
- Foamed float for extraordinary stability and minimum noise
- Stainless steel pump basket
- Mounting set included
- Optional lighting set

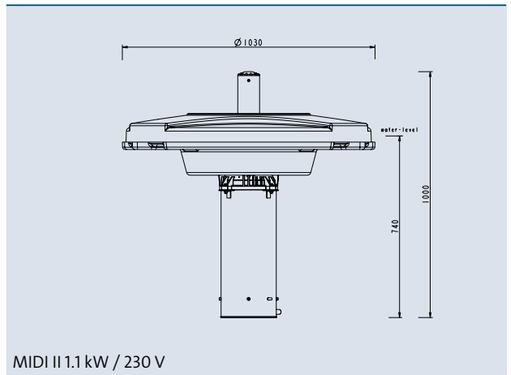

MIDI II 1.1 kW / 230 V

MIDI II 1.1 kW / 230 V

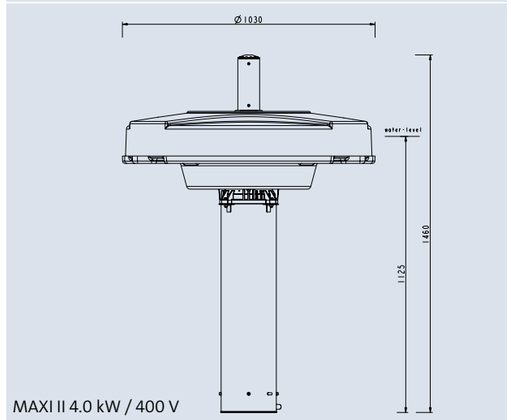

MAXI II 4.0 kW / 400 V

Easy to install, low-maintenance and with an attractive design: The MIDI/MAXI floating fountain features for interesting water effects both day and night.

Three different motor power outputs with confirming to standards earthed plugs (230 V) and motor circuit breaker or CEE plug (400 V) offer solutions for different bodies of water and conditions. Optimised water pressure creates impressive heights for the four available nozzle patterns with 3" standard threads for fast changing. The easy-to-install LunAqua 10 LED/01 illumination set provides for impressive illumination of the water features with a height of up to 16.5 m.

Schuko plugs + control box The 230V version is delivered ready for operation with control box and Schuko connector.

CEE-connector + motor protection switch The 400V versioncomes with a ready-to-connect, 5-pole CEE connector and motor protection switch

		MIDI II 1.1 kW / 230 V	MAXI II 4.0 kW / 400 V
Dimensions incl. Nozzle (Ø x H)	[mm]	1030x 1000	1030 x 1460
Motor power	[kW]	1.1	4.0
Pump output	[l/h]	22000	39000
Minimum water depth	[mm]	1000	1250
Protection class		IP 68	IP 68
Rated current (230V/400V)	[A]	7.3	9.6
Voltage	[V/Hz]	230 AC / 50	400 AC / 50
Weight	[kg]	80	105
Pump cable set (length)	[m]	50	50
Order no.		50365	50371

Floating fountains
MIDI II / MAXI II

Geyser Jet 30

Geyser Jet 30

High Jet 30

High Jet 30

	Fresh Water	Pool Water	Sea Water	220-240 V	400 V	110-120 V	50 Hz	60 Hz	12 V AC	24 V DC	DMX	DMX/ RDM	Plug and Spray
Geyser Jet 30 / Hight Jet 30	●	○	○	○	○	○	○	○	○	○	○	○	○

MIDI II / MAXI II fountain attachments

Fountain attachments		Geyser Jet 30		High Jet 30	
Pump power		**1.1 kW** / 230 V	**4.0 kW** / 400 V	**1.1 kW** / 230 V	**4.0 kW** / 400 V
Fountain height (total)	[m]	5.0	12.0	9.0	16.5
Fountain height (1st step)	[m]	–	–	–	–
Nozzle spray diameter	[m]	1.7	2.7	3.0	3.5
Order no.		**50377**		**50375**	

All MIDI/MAXI attachments comes with **3"-thread**.

Please find more information on our nozzles on page 76.

Grand Vulcan 30

Grand Vulcan 30

Trumpet Jet 30

Trumpet Jet 30

	Fresh Water	Pool Water	Sea Water	220-240 V	400 V	110-120 V	50 Hz	60 Hz	12 V AC	24 V DC	DMX	DMX/ RDM	Plug and Spray
Grand Vulcan 30 / Trumpet Jet 30	●	○	○	○	○	○	○	○	○	○	○	○	○

Fountain attachments		Grand Vulcan 30		Trumpet Jet 30	
Pump power		**1.1 kW** / 230 V	**4.0 kW** / 400 V	**1.1 kW** / 230 V	**4.0 kW** / 400 V
Fountain height (total)	[m]	3.0	7.0	5.0	9.5
Fountain height (1st step)	[m]	–	–	1.2	2.5
Nozzle spray diameter	[m]	4.0	6.8	4.0	7.5
Order no.		**50376**		**50378**	

All MIDI/MAXI attachments comes with **3"-thread**.

Please find more information on our nozzles on page 84.

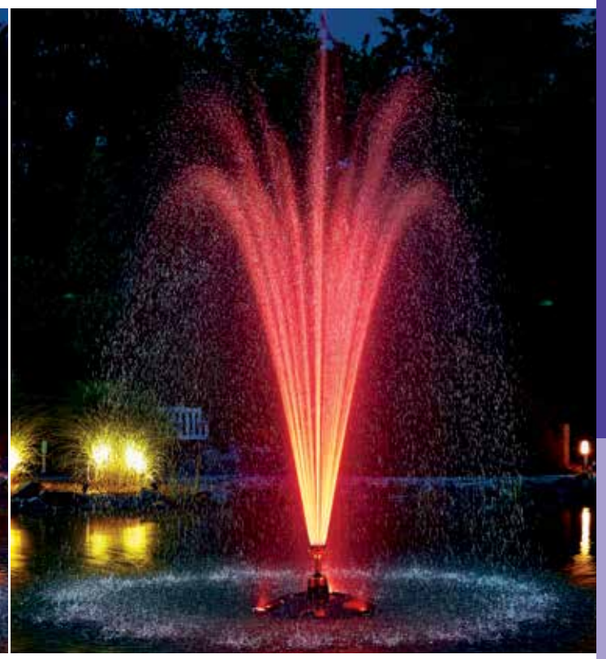

	Fresh Water	Pool Water	Sea Water	220-240 V	400 V	110-120 V	50 Hz	60 Hz	12 V AC	24 V DC	DMX	DMX/ RDM	Plug and Spray
Floating fountain illumination RGB	●	○	○	○	○	●	○	●	●	○	○	○	●
LED-Floating fountain illumination White	●	○	○	●	○	○	●	○	○	●*	○	○	●
Illumination set PondJet	●	○	○	○	○	●	○	●	●	○	○	○	●

*0-24 V/350 mA/DC

Illumination sets Floating Fountains

Illumination Set – The spotlight sets illuminate the different water patterns in spectacular light.

The small, compact, and powerful LED spotlights provide white or coloured fountain illumination by low power consumption.

Multiple, invividual colour-effects can be created with the Floating Fountain Illumination Set RGB together with the right accessories.
The below overview shows the required number of Illumination sets for different Floating Fountains.

Floating fountain illumination RGB

	42641 Floating fountain illumination set RGB	42637 LED-Floating fountain illumination white
PondJet Eco	1 Set	1 Set
MIDI II	3 Sets	3 Sets
MAXI II	3 Sets	3 Sets
AirFlo 1.5 kW	3 Sets	3 Sets
AirFlo 4.0 kW	3 Sets	3 Sets

*OASE-recommendation

		Floating fountain illumination set RGB	LED-Floating fountain illumination white	Illumination set PondJet
Luminous flux all on	[lm]	3 x 213	-	-
Luminous flux red	[lm]	3 x 64	-	-
Luminous flux green	[lm]	3 x 114	-	-
Luminous flux blue	[lm]	3 x 35	-	-
Luminous flux white	[lm]	-	3 x 580	750
Colour temperature white	[K]	-	2700	2700
Beam angle	[°]	25	30	24
Strobe effect	[Hz]	25	-	-
Energy efficiency class of light fixture		A	A++	-
Weighted energy consumption per light fixture	[kWh/1000h]	6.6	6.4	-
Rated voltage (primary, secondary)	[V/DC]	230 V / 50 Hz, 24 V / DC	230 V / 50 Hz, 24 V / DC	230 V / 50 Hz, 12 V / AC
Power consumption	[W]	19	19	157
Dim frequency	[Hz]	2.8	-	-
Cable length		20 m other cable length on request	20 m other cable length on request	75 ft
DMX connection		2 x (1 x input / 1 x output)	-	-
Protection class		IP 68	IP 68	IP 68
Dimensions (Ø x H)	[mm]	80 x 117	80 x 117	145 x 160 x 182
Material		Stainless steel, plastic	Stainless steel, plastic	Stainless steel, plastic
Weight	[kg]	8.8	5.6	9.34
Suitable for		PondJet Eco; MIDI II; MAXI II; AirFlo	PondJet Eco; MIDI II; MAXI II; AirFlo	PondJet
Scope of delivery		3 x ProfiLux Garden LED RGB light, 1 x ProfiLux Garden LED Controller, 3 x mounting bracket, 1 x stainless steel holder for LED Controller, 20 m DMX cable	3 x LunAqua Power LED light, 1 x LunAqua Power LED Driver, 3 x mounting bracket, 1 x stainless steel holder for LED Driver	3 x LunAqua 10 Halogen light with 50 W Halogen illuminant, 3 x mounting bracket 1 x Underwater transformer UST 150 1 x holder for transformator
Order no.		**42641**	**42637**	**51071**

Floating fountains
Illumination systems

Pumps

Although our pumps are an elementary component ofa perfectly matched system, spectators never get to see them. From small to large and from static to controllable: Each fountain installation can be designed individually – OASE has the right equipment. We differentiate between classic and controllable pumps. The latter group gives the water feature even more flexibility and ensures a greater number of possibilities. OASE pumps enable wet installation in the pool – this means carefree operators. The direct connection between pumps and nozzles guarantees an effective water supply: This reduces costs, energy consumption and material use. Options for remote diagnosis and maintenance make life even easier. For greater freedom, greater capacity and greater enjoyment.

CONTROLLABLE PUMPS

122 Varionaut Pumps

CLASSIC PUMPS

134 Water feature pumps
136 Universal pumps
140 Block centrifugal pumps
142 Multi-stage structured submersible motor-driven pumps

New products

Pumps | controllable

Page 126 **Varionaut 240 24 V**
Page 130 **Varionaut 270 230 V**
Page 132 **Varionaut 400 230 V**

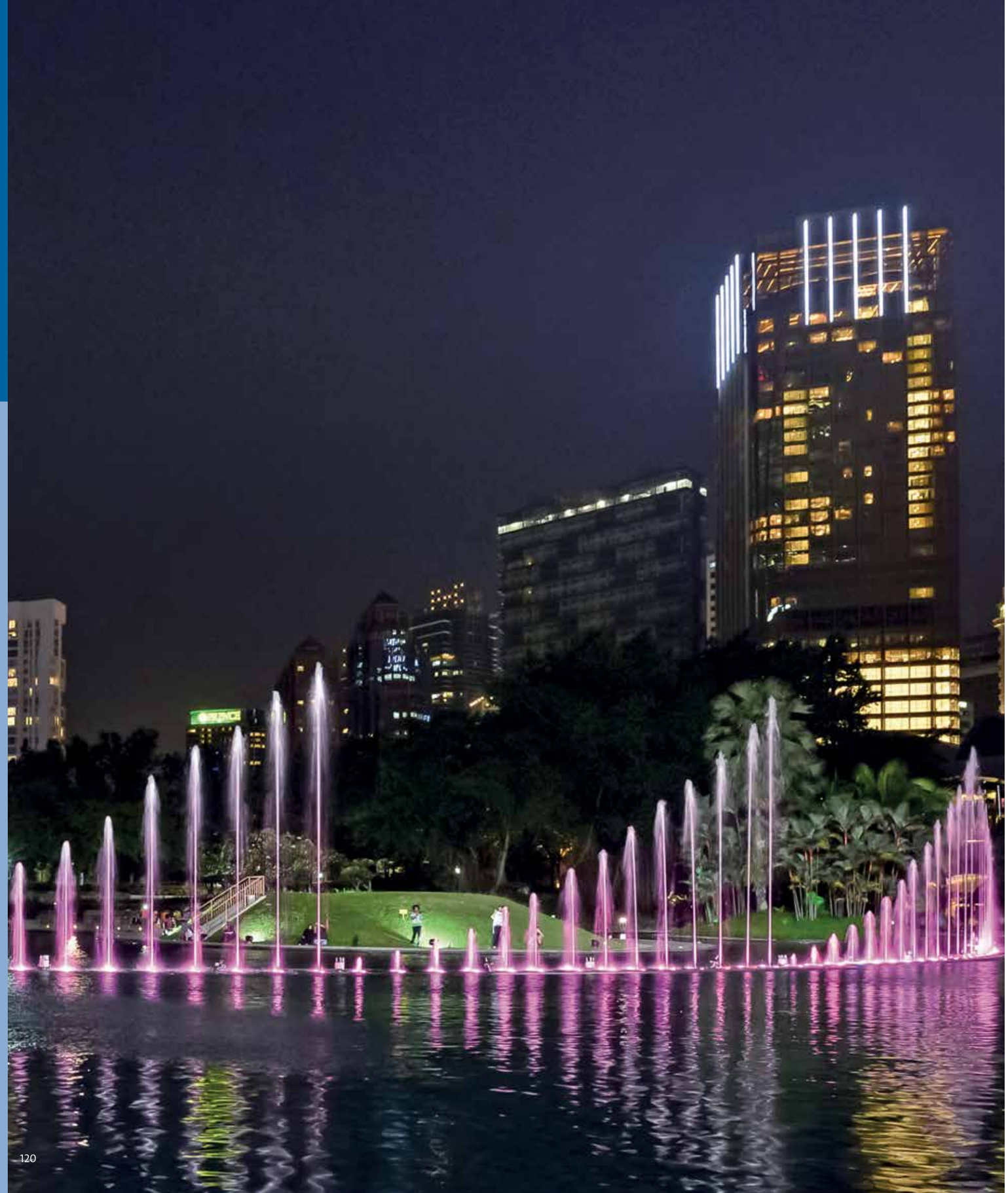

Varionaut Pumps

Through the pumps controlled via DMX/RDM, the volume flow of each individual pump can be changed. This creates dynamic, individual water patterns. Additional mechanical water distributors and control valves are not needed.

For example, through the combination of Varionaut pumps with JumpingJets or Varionaut pumps with VarioJets, new, enchanting, dynamic overlaid effects are generated.

The OASE Varionaut pump product range is patented and is offered in 24 V DC technology and 230 V, 50/60 Hz technology in different sizes.

This performance map is helpful for initial selection of the right Varionaut pump. Additional details are on the product pages.

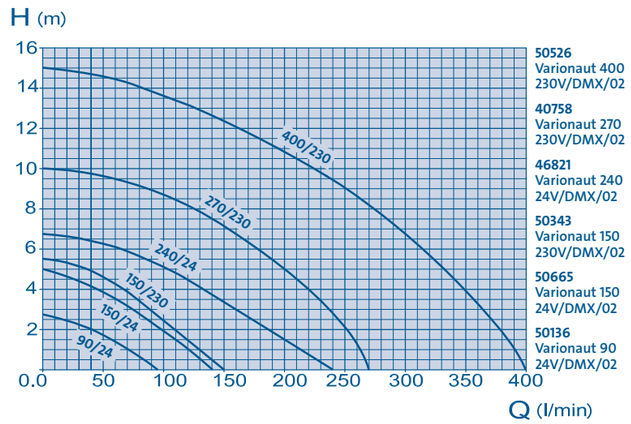

Pumps

	Fresh Water	Pool Water	Sea Water	220-240 V	400 V	110-120 V	50 Hz	60 Hz	12 V AC	24 V DC	DMX	DMX/ RDM	Plug and Spray
Varionaut 90 24 V /DMX/02	●	●	○	○	○	○	○	○	○	●	●	●	●

Varionaut 90 24 V /DMX/02

The Varionaut 90 /DMX/02 is the smallest powerful DMX/RDM compatible pump with 24 V DC technology. This highly dynamic, individually adjustable pump generates water features with exact repeatable fountain heights.

The Varionaut 90 24 V DC complies with the international installation regulations for fountain installations and may be installed directly in the pool (<30V DC). The maximum fountain height that can be achieved with the Comet 5 - 8 is 2m in just 0.6 second. The pump has 1 m power cable with 24 V DC connection box and 1 m BUS cable with DMX connection box including capillary lock. The second DMX/RDM connector allows other devices (such as other pumps or LED fixtures) to be interconnected. The patented IP 68 waterproof connector makes installation safer, easier and faster.

Product characteristics at a glance

- **High dynamic fountain pump**
- **Frost protected up to -20 ° C**
- **Smallest 24 V DC technology pump with DMX/RDM**
- **Individual controllable closed loop speed control via DMX with continuous flow rate**
- **24 V DC pump for indoor and outdoor**
- **Suitable for wet or dry installation**
- **Power consumption max. 60 W**
- **1 m power cable with power box 24 V DC**
- **Reverse polarity protection**
- **2 DMX/RDM ports (1 x input/ 1 x output)**
- **IP 68 rated**
- **DMX/RDM capable**

Varionaut 90 24 V /DMX/02

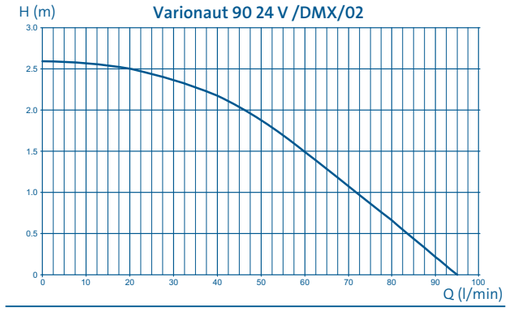

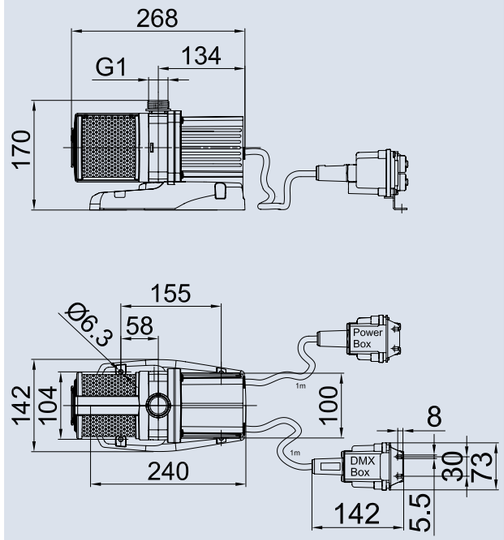

Varionaut 90 24 V /DMX/02

Accessories (must be ordered separately)

	Order no.
Comet 5 - 8 Silver (see page 66)	50762
Comet 5 - 8 T (see page 68)	50964
Connecting cable DMX /01 (see page 194)	
Connecting cable DMX / 1.0 m /01	12368
Connecting cable DMX / 1.5 m /01	49628
Connecting cable DMX / 3.0 m /01	12369
Connecting cable DMX / 5.0 m /01	12371
Connecting cable DMX / 10.0 m /01	12372
Connecting cable DMX / 20.0 m /01	12373
End resistant for BUS-system DMX/01	12007
Connecting cable 24 V DC /01 (see page 192)	
Connecting cable 24 V DC / 1.0 m /01	12762
Connecting cable 24 V DC / 1.5 m /01	49629
Connecting cable 24 V DC / 3.0 m /01	12552
Connecting cable 24 V DC / 7.5 m /01	12553
Connecting cable 24 V DC / 15.0 m /01	11720
PowerBox 24 V DC /01 (see page 192)	50493
Underwater power supply 250 / 24 V /01 (see page 202)	50733
WECS II 512 /DMX/02 (see page 206)	56491
WECS II 1024 /DMX/02 (see page 206)	56492
WECS II 2048 /DMX/02 (see page 212)	56507

Varionaut 90 24 V /DMX/02		
Certificate		CE
Motor Type/ Electronic		24 V/DC EC-Motor, DMX controlled (DMX/RDM enabled)
Hmax	[m]	2.6
Qmax	[l/min]	95
Qmin (Offset-mode – DMX 0)	[l/min]	26
Qmax	[l/h]	5700
Power max.	[W]	60
Max. apparent power consumption	[VA]	72
Power input at highest fountain	[W]	60
Power input at lowest fountain	[W]	5
Nominal current	[A]	3
Starting current (0.01 Sec.)	[A]	82
Nominal voltage	[V/DC]	24
Dynamic behaviour speed: (time to reach full fountain height from 0 – 100 % - with Comet 5 - 8)	[s]	0.6
Run up time	[s]	< 3.0
Max. Powering up / min. Off time	[s]	1 x per minute / 10 s
Environmental conditions: submersible application	[°C]	Water temperature: min. 4 to max. 35
Environmental conditions: dry application	[°C]	Ambient temperature: max. 30°C with natural convection, max. 40°C with forced convection, no direct sun exposure permitted
Protection category		IP 68
Protection class (EN 61140)		III
Mounting position		horizontal
Minimum distance to nearby devices	[mm]	100
Installation (on site)		4 screws max. M 6
Immersion depth max.	[m]	4
Suction side connection	[inch]	Thread G 1 ½ (external thread)
Pressure side connection	[inch]	Thread G 1 (external thread)
Filter housing		Plastic / stainless steel 1.4301 (AISI 304)
DMX connection		1m BUS cable with DMX box
Input power		1m 24 V power cable with power box
Number of DMX-channels	[pieces]	2 channels (control channel, speed channel)
Dimensions incl. filter (LxWxH)	[mm]	268 x 142 x 170
Material		Plastic / stainless steel
Weight	[kg]	3.7
Order no.		**50136**

	Fresh Water	Pool Water	Sea Water	220-240 V	400 V	110-120 V	50 Hz	60 Hz	12 V AC	24 V DC	DMX	DMX/ RDM	Plug and Spray
Varionaut 150 24 V /DMX/02	●	●	○	○	○	○	○	○	○	●	●	●	●

Varionaut 150 24 V /DMX/02

The Varionaut 150 24 V /DMX/02 is the mid-range DMX/RDM compatible pump with 24 V DC technology. This highly dynamic, individually adjustable pump generates water features with exact repeatable fountain heights.

The Varionaut 150 24 V DC complies with the international installation regulations for fountain installations and may be installed directly in the pool (<30V DC). The maximum fountain height that can be achieved in 1 second with the Comet 10 - 12 is 3.1 m. The pump (50665) has 1 m power cable with 24 V DC connection box and 1 m BUS cable with DMX connection box including capillary lock. The second DMX/RDM connector allows other devices (such as other pumps or LED fixtures) to be interconnected. The patented IP 68 waterproof connector makes installation safer, easier and faster.

Product characteristics at a glance

- High dynamic fountain pump
- Frost protected up to -20° C
- Meanest 24 V DC technology pump with DMX/RDM
- Individual controllable closed loop speed control via DMX with continuous flow rate
- 24 V DC pump for indoor and outdoor
- Suitable for wet installation
- Power consumption max.120 W
- 1 m power cable with power box 24 V DC
- Reverse polarity protection
- 2 DMX/RDM ports (1 x input/ 1 x output)
- IP 68 rated
- DMX/RDM capable

Varionaut 150 24 V /DMX/02

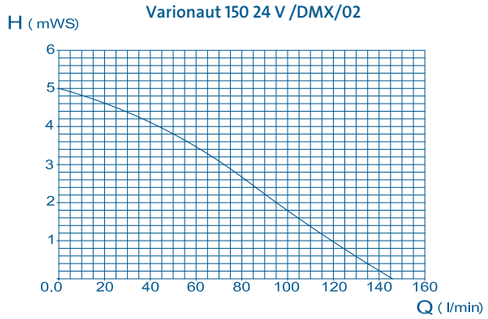

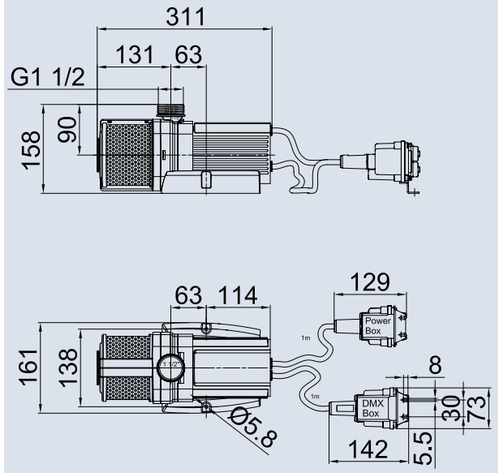

Varionaut 150 24 V /DMX/02 (50655)

To operate the Varionaut 150 24 V an OASE WECS is required (not included).

Accessories (must be ordered separately)

	Order no.
Comet 15 - 15 T (see page 68)	48276
Reducing sleeve 20 x 15 (see page 259)	51030
Connecting cable DMX /01 (see page 194)	
Connecting cable DMX / 1.0 m /01	12368
Connecting cable DMX / 1.5 m /01	49628
Connecting cable DMX / 3.0 m /01	12369
Connecting cable DMX / 5.0 m /01	12371
Connecting cable DMX / 10.0 m /01	12372
Connecting cable DMX / 20.0 m /01	12373
End resistant for BUS-system DMX/01	12007
Connecting cable 24 V DC /01 (see page 192)	
Connecting cable 24 V DC / 1.0 m /01	12762
Connecting cable 24 V DC / 1.5 m /01	49629
Connecting cable 24 V DC / 3.0 m /01	12552
Connecting cable 24 V DC / 7.5 m /01	12553
Connecting cable 24 V DC / 15.0 m /01	11720
PowerBox 24 V DC /01 (see page 192)	50493
Underwater power supply 250 / 24 V /01 (see page 202)	50733
WECS II 512 /DMX/02 (see page 206)	56491
WECS II 1024 /DMX/02 (see page 206)	56492
WECS II 2048 /DMX/02 (see page 212)	56507

Varionaut 150 24 V /DMX/02				
Certificate		CE		MET (US)
Motor Type/ Electronic		24 V / DC EC-Motor, DMX controlled (DMX/RDM enabled)		230 V EC-Motor, DMX controlled (DMX/RDM enable)
Hmax	[m]	5	[ft]	16.40
Qmax	[l/min]	145	[gph]	2300
Qmin (Offset-mode – DMX 0)	[l/min]	22	[gph]	350
Qmax	[l/h]	8700	[gpm]	38
Power max.	[W]	120	[W]	120
Max. apparent power consumption	[VA]	120	[VA]	120
Power input at highest fountain	[W]	120	[W]	120
Power input at lowest fountain	[W]	5	[W]	5
Nominal current	[A]	5	[A]	5
Starting current (0.01 Sec.)	[A]		[A]	88
Nominal voltage	[V/DC]	24	[V/Hz]	24
Dynamic behaviour speed: (time to reach full fountain height from 0 – 100 % - with Comet 10 - 12)	[s]	1	[s]	1
Run up time	[s]	< 3.0	[s]	< 3.0
Max. Powering up / min. Off time	[s]	1 x per minute / 10 s	[s]	1 x per minute / 10 s
Environmental conditions: submersible application	[°C]	Water temperature: min. 4 to max. 35	[°F]	Water temperature: min. +39.2 to max. +95
Environmental conditions: dry application	[°C]	Ambient temperature: max. 30°C with natural convection, max. 40°C with forced convection, no direct sun exposure permitted	[°F]	Ambient temperature: max. 86°F with natural convection, max. 104°F with forced convection, no direct sun exposure permitted
Protection category		IP 68		IP 68
Protection class (EN 61140)		III		III
Mounting position		horizontal		horizontal
Minimum distance to nearby devices	[mm]	100	[ft]	0.33
Installation (on site)		2 screws max. M 5		2 screws max. M 5
Immersion depth max.	[m]	4	[ft]	13.1
Suction side connection	[inch]	Thread G 1 ½ (external thread)	[inch]	Thread G 1 ½ (external thread)
Pressure side connection	[inch]	Thread G 1 ½ (external thread)	[inch]	Thread G 1 ½ (external thread)
Filter housing		Plastic / stainless steel 1.4301 (AISI 304)		Plastic / stainless steel 1.4301 (AISI 304)
DMX connection		1m BUS cable with DMX box		3.28 BUS cable with DMX-box
Input power		1m 24 V power cable with power box		20 ft power cable without plug
Number of DMX-channels	[pieces]	2 channels (control channel, speed channel)		2 channels (control channel, speed channel)
Dimensions incl. filter (LxWxH)	[mm]	311 x 161 x 158	[inch]	12.2 x 6.3 x 6.2
Material		Plastic / stainless steel		Plastic / stainless steel
Weight	[kg]	5	[lb]	11
Order no.		**50665**		**57650**

Pumps
Controllable Pumps

	Fresh Water	Pool Water	Sea Water	220-240 V	400 V	110-120 V	50 Hz	60 Hz	12 V AC	24 V DC	DMX	DMX/ RDM	Plug and Spray
Varionaut 240 24 V /DMX/02	●	●	○	○	○	○	○	○	○	●	●	●	●

Varionaut 240 24 V /DMX/02

The Varionaut 240 24 V /DMX/02 is the most powerful DMX/RDM compatible pump with 24 V DC technology. This highly dynamic, individually adjustable pump generates water features with exact repeatable fountain heights. The maximum fountain height of 4.8 m is achieved in just 1 second with the Comet 15 - 15.

The Varionaut 240 complies with the international installation regulations for fountain installations and may be installed directly in the pool (<30V DC). Two DMX/RDM connections (1 x input, 1 x output) including capillary lock are fixed to the pump. The second DMX/RDM connector allows other devices (such as other pumps or LED fixtures) to be interconnected. The patented IP 68 waterproof connector makes installation safer, easier and faster.

Innovation – made by OASE

Varionaut 240 24 V /DMX/02

Product characteristics at a glance

- High dynamic fountain pump
- Frost protected up to -20° C
- Largest 24 V DC technology pump with DMX/RDM
- Individual controllable closed loop speed control via DMX with continuous flow rate
- 24 V DC pump for indoor and outdoor
- Suitable for wet or dry installation
- Power consumption max.240 W
- 1 m power cable with power box 24 V DC
- Reverse polarity protection
- 2 DMX/RDM ports (1 x input/ 1 x output) directly at the pump
- IP 68 rated
- DMX/RDM capable

Varionaut 240 24 V /DMX/02

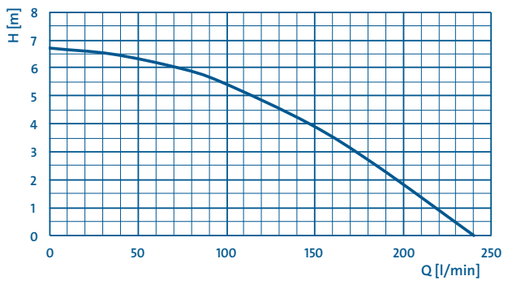

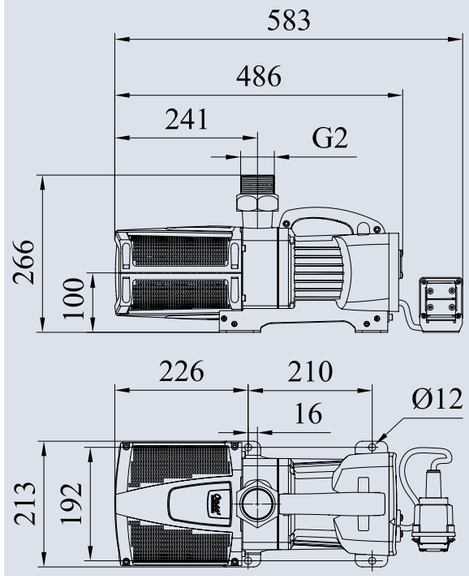

Varionaut 240 24 V /DMX/02

Accessories (must be ordered separately)

	Order no.
Comet 15 - 15 Silver (see page 66)	48276
Cluster Eco 15 - 38 (see page 72)	45480
Reducing sleeve 20 x 15 (see page 259)	51030
Connecting cable DMX /01 (see page 194)	
Connecting cable DMX / 1.0 m /01	12368
Connecting cable DMX / 1.5 m /01	49628
Connecting cable DMX / 3.0 m /01	12369
Connecting cable DMX / 5.0 m /01	12371
Connecting cable DMX / 10.0 m /01	12372
Connecting cable DMX / 20.0 m /01	12373
End resistant for BUS-system DMX/01	12007
DMX-Box /01	57646
Connecting cable 24 V DC /01 (see page 192)	
Connecting cable 24 V DC / 1.0 m /01	12762
Connecting cable 24 V DC / 1.5 m /01	49629
Connecting cable 24 V DC / 3.0 m /01	12552
Connecting cable 24 V DC / 7.5 m /01	12553
Connecting cable 24 V DC / 15.0 m /01	11720
PowerBox 24 V DC /01 (see page 192)	50493
Underwater power supply 250 / 24 V /01 (see page 202)	50733
WECS II 512 /DMX/02 (see page 206)	56491
WECS II 1024 /DMX/02 (see page 206)	56492
WECS II 2048 /DMX/02 (see page 212)	56507

Varionaut 240 24 V /DMX/02		
Certificate		CE
Motor Type/ Electronic		230 V EC-Motor, DMX controlled (DMX/RDM enable)
Hmax	[m]	6.7
Qmax	[l/min]	240
Qmin (Offset-mode – DMX 0)	[l/min]	10
Qmax	[l/h]	14400
Power max.	[W]	240
Max. apparent power consumption	[VA]	240
Power input at highest fountain	[W]	240
Power input at lowest fountain	[W]	25
Nominal current	[A]	10
Starting current (0.01 Sec.)	[A]	14
Nominal voltage	[V/DC]	24
Dynamic behaviour speed: (time to reach full fountain height from 0 – 100 % - with Comet 15 - 15)	[s]	1
Run up time	[s]	< 3.0
Max. Powering up / min. Off time	[s]	1 x per minute / 10 s
Environmental conditions: submersible application	[°C]	Water temperature: min. 4 to max. 35
Environmental conditions: dry application	[°C]	Ambient temperature: max. 30°C with natural convection, max. 40°C with forced convection, no direct sun exposure permitted
Protection category		IP 68
Protection class (EN 61140)		III
Mounting position		horizontal
Minimum distance to nearby devices	[mm]	100
Installation (on site)		4 screws max. M10
Immersion depth max.	[m]	4
Suction side connection	[inch]	Thread G 2 (external thread)
Pressure side connection	[inch]	Thread G 2 (external thread)
Filter housing		Plastic / stainless steel 1.4301 (AISI 304)
DMX connection		2 x (1 x input / 1 x output)
Input power		1m power cable with power box
Number of DMX-channels	[pieces]	2 channels (control channel, speed channel)
Dimensions incl. filter (LxWxH)	[mm]	486 x 213 x 266
Material		Plastic / stainless steel
Weight	[kg]	11.5
Order no.		46821

	Fresh Water	Pool Water	Sea Water	220-240 V	400 V	110-120 V	50 Hz	60 Hz	12 V AC	24 V DC	DMX	DMX/ RDM	Plug and Spray
Varionaut 150 /DMX/02	●	●	○	●	○	○	●	●	○	○	●	●	●

Varionaut 150 /DMX/02

The Varionaut 150 /DMX/02 is the smallest 220-240 V AC MX/RDM compatible pump. This individually adjustable pump generates highly dynamic water features with exact repeatable fountain heights. The maximum fountain height of approx. 3.5 m is achieved in just 1 second with the Comet 10 - 12.

The pump has 10 m power cable and 1 m BUS cable with DMX connection box including capillary lock. The second DMX/RDM connector allows other devices (such as other pumps or LED fixtures) to be interconnected. The patented IP 68 waterproof connector makes installation safer, easier and faster.

Product characteristics at a glance

- High dynamic fountain pump
- Smallest (220-240 V AC version) DMX/RDM Varionaut pump
- Individual controllable closed loop speed control via DMX with continuous flow rate
- 230 V AC pump for indoor and outdoor
- Suitable for wet or dry installation
- Power consumption max.130 W
- 10 m power cable with plug (50343), 20 ft power cable without plug (57690)
- 2 DMX/RDM ports (1 x input/ 1 x output) directly at the pump
- IP 68 rated
- DMX/RDM capable

Varionaut 150 /DMX/02

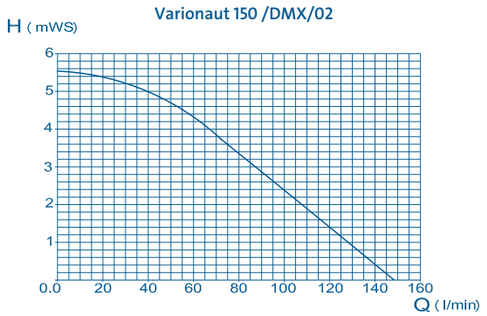

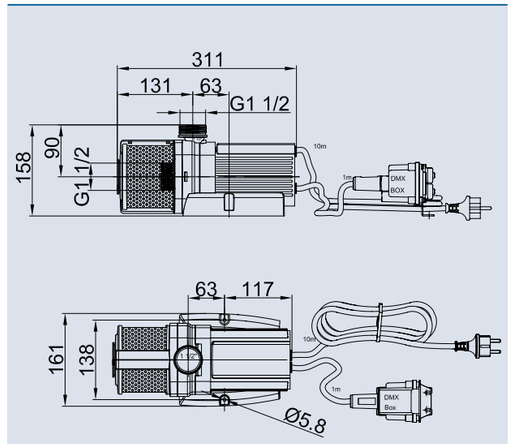

Varionaut 150 /DMX/02

Accessories (must be ordered separately)

	Order no.
Comet 10 - 12 T (see page 68)	50968
Cluster Eco 15 - 38 (see page 72)	45480
Reducing Sleeve 15 x 10 (see page 259)	51032
Connecting cable DMX /01 (see page 194)	**Order no.**
Connecting cable DMX / 1.0 m /01	12368
Connecting cable DMX / 1.5 m /01	49628
Connecting cable DMX / 3.0 m /01	12369
Connecting cable DMX / 5.0 m /01	12371
Connecting cable DMX / 10.0 m /01	12372
Connecting cable DMX / 20.0 m /01	12373
End resistant for BUS-system DMX/01	12007
WECS II 512 /DMX/02 (see page 206)	56491
WECS II 1024 /DMX/02 (see page 206)	56492
WECS II 2048 /DMX/02 (see page 212)	56507

Varionaut 150 /DMX/02				
Certificate		VDE, CE		MET (US)
Motor Type/ Electronic		30 V AC EC-Motor, DMX controlled (DMX/RDM enable)		230 V AC EC-Motor, DMX controlled (DMX/RDM enable)
Hmax	[m]	5.6	[ft]	18
Qmax	[l/min]	150	[gph]	2400
Qmin (Offset-mode – DMX 0)	[l/min]	24	[gph]	380
Qmax	[l/h]	9000	[gpm]	40
Power max.	[W]	130	[W]	130
Max. apparent power consumption	[VA]	143	[VA]	170
Power input at highest fountain	[W]	130	[W]	130
Power input at lowest fountain	[W]	5	[W]	5
Nominal current	[A]	1,1	[A]	1.3
Starting current (0.01 Sec.)	[A]	37	[A]	37
Nominal voltage	[V/Hz]	220-240, 50/60	[V/Hz]	220-240, 50/60
Dynamic behaviour speed: (time to reach full fountain height from 0 – 100 % - with Comet 10 - 12)	[s]	1	[s]	1
Run up time	[s]	< 3.0	[s]	< 3.0
Max. Powering up / min. Off time	[s]	1 x per minute / 10 s	[s]	1 x per minute / 10 s
Environmental conditions: submersible application	[°C]	Water temperature: min. 4 to max. 35	[°F]	Water temperature: min. +39.2 to max. +95
Environmental conditions: dry application	[°C]	Ambient temperature: max. 30°C with natural convection, max. 40°C with forced convection, no direct sun exposure permitted	[°F]	Ambient temperature: max. 86°F with natural convection, max. 104°F with forced convection, no direct sun exposure permitted
Protection category		IP 68		IP 68
Protection class (EN 61140)		I		I
Mounting position		horizontal		horizontal
Minimum distance to nearby devices	[mm]	100	[ft]	0.33
Installation (on site)		2 screws max. M 5		2 screws max. M 5
Immersion depth max.	[m]	4	[ft]	13.1
Suction side connection	[inch]	Thread G 1 ½ (external thread)	[inch]	Thread G 1 ½ (external thread)
Pressure side connection	[inch]	Thread G 1 ½ (external thread)	[inch]	Thread G 1 ½ (external thread)
Filter housing		Plastic / stainless steel 1.4301 (AISI 304)		Plastic / stainless steel 1.4301 (AISI 304)
DMX connection		1 m BUS cable with DMX box		3.28 BUS cable with DMX-box
Input power		1 m 24 V power cable with power box		20 ft power cable without plug
Number of DMX-channels	[pieces]	2 channels (control channel, speed channel)		2 channels (control channel, speed channel)
Dimensions incl. filter (LxWxH)	[mm]	311 x 161 x 158	[inch]	12.2 x 6.3 x 6.2
Material		Plastic / stainless steel		Plastic / stainless steel
Weight	[kg]	4.9	[lb]	11
Order no.		50343		57690

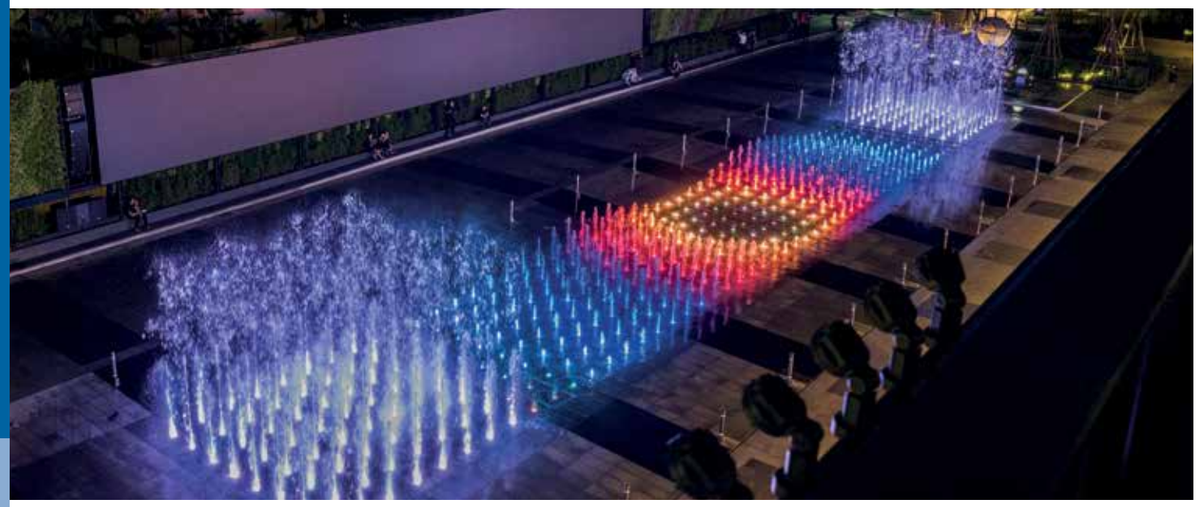

	Fresh Water	Pool Water	Sea Water	220-240 V	400 V	110-120 V	50 Hz	60 Hz	12 V AC	24 V DC	DMX	DMX/ RDM	Plug and Spray
Varionaut 270 /DMX/02	●	●	○	●	○	○	●	●	○	○	●	●	●

Varionaut 270 /DMX/02

The high dynamic fountain pump Varionaut 270 /DMX/02 closes the gap between the existing Varionaut 150 and Varionaut 400. This energy-efficient pump can be regulated and controlled via the integrated DMX/RDM port. Thus, individual and dynamic water effects can be realized with exactly repeatable fountain heights.

The Varionaut 270 /DMX/02 is equipped with a 10 m power cable with plug and two inbuilt DMX/RDM ports including capillary barrier. The pump is individually addressable and controllable. Other devices (such as LED lights) which are connected to the second DMX/RDM port can be looped. The IP 68 waterproof, patented connection system eliminates the need of manual wiring. The installation is safer, easier and faster.

Innovation – made by OASE

Varionaut 270 /DMX/02

Product characteristics at a glance

- High dynamic fountain pump
- Individual controllable closed loop speed control via DMX with continuous flow rate
- 230 V AC pump for indoor and outdoor
- Suitable for wet or dry installation
- Power consumption max. 380 W
- Without initial current
- 10 m power cable with plug (40758), 20 ft power cable without plug (40844)
- 2 DMX/RDM ports (1 x input/ 1 x output) directly at the pump
- Frost protected up to -20° C
- IP 68 rated
- DMX/RDM capable

Product video

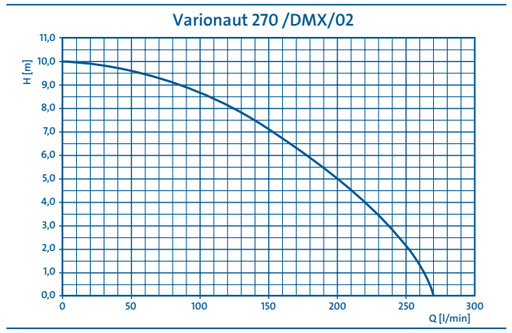

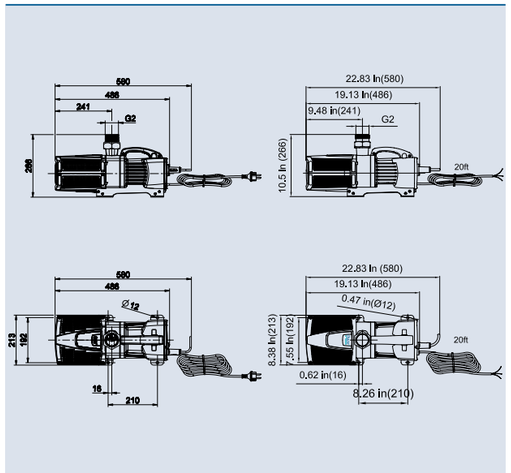

40758 Varionaut 270 /DMX/02 40844 Varionaut 270 /DMX/02

Accessories (must be ordered separately)

	Order no.
Comet 15 - 15 Silver (see page 66)	48276
Cluster Eco 15 - 38 (see page 72)	45480
Reducing sleeve 20 x 15 (see page 259)	51030
Connecting cable DMX /01 (see page 194)	**Order no.**
Connecting cable DMX / 1.0 m /01	12368
Connecting cable DMX / 1.5 m /01	49628
Connecting cable DMX / 3.0 m /01	12369
Connecting cable DMX / 5.0 m /01	12371
Connecting cable DMX / 10.0 m /01	12372
Connecting cable DMX / 20.0 m /01	12373
End resistant for BUS-system DMX/01	12007
DMX-Box /01	57646
WECS II 512 /DMX/02 (see page 206)	56491
WECS II 1024 /DMX/02 (see page 206)	56492
WECS II 2048 /DMX/02 (see page 212)	56507

Varionaut 270 DMX/02				
Certificate		VDE, CE		MET (US)
Motor Type/ Electronic		230 V EC-Motor, DMX controlled (DMX/RDM enable)		230 V EC-Motor, DMX controlled (DMX/RDM enable)
Hmax	[m]	10	[ft]	33
Qmax	[l/min]	270	[gph]	4280
Qmin (Offset-mode – DMX 0)	[l/min]	10	[gph]	159
Qmax	[l/h]	16200	[gpm]	71
Power max.	[W]	380	[W]	380
Max. apparent power consumption	[VA]	410	[VA]	410
Power input at highest fountain	[W]	380	[W]	380
Power input at lowest fountain	[W]	25	[W]	25
Nominal current	[A]	1.9	[A]	1.9
Starting current (0.01 Sec.)	[A]	21	[A]	21
Nominal voltage	[V/Hz]	220-240 / 50/60	[V/Hz]	220-240 / 50/60
Dynamic behaviour speed: (time to reach full fountain height from 0 – 100 % - with Comet 15 - 15)	[s]	1	[s]	1
Run up time	[s]	< 3.0	[s]	< 3.0
Max. Powering up / min. Off time	[s]	1 x per minute / 10 s	[s]	1 x per minute / 10 s
Environmental conditions: submersible application	[°C]	Water temperature: min. 4 to max. 35	[°F]	Water temperature: min. +39.2 to max. +95
Environmental conditions: dry application	[°C]	Ambient temperature: max. 30°C with natural convection, max. 40°C with forced convection, no direct sun exposure permitted	[°F]	Ambient temperature: max. 86°F with natural convection, max. 104°F with forced convection, no direct sun exposure permitted
Protection category		IP 68		IP 68
Protection class (EN 61140)		I		I
Mounting position		horizontal		horizontal
Minimum distance to nearby devices	[mm]	100	[ft]	0.33
Installation (on site)		4 screws max. M10		4 screws max. M10
Immersion depth max.	[m]	4	[ft]	13.1
Suction side connection	[inch]	Thread G 2 (external thread)	[inch]	Thread G 2 (external thread)
Pressure side connection	[inch]	Thread G 2 (external thread)	[inch]	Thread G 2 (external thread)
Filter housing		Plastic / stainless steel 1.4301 (AISI 304)		Plastic / stainless steel 1.4301 (AISI 304)
DMX connection		2 x (1 x input / 1 x output)		2 x (1 x input / 1 x output)
Input power		10 m power cable with plug		20 ft power cable without plug
Number of DMX-channels	[pieces]	2 channels (control channel, speed channel)		2 channels (control channel, speed channel)
Dimensions incl. filter (LxWxH)	[mm]	486 x 213 x 266	[inch]	19.1 x 8.43 x 10.5
Material		Plastic / stainless steel		Plastic / stainless steel
Weight	[kg]	12.1	[lb]	26.7
Order no.		40758		40844

	Fresh Water	Pool Water	Sea Water	220-240 V	400 V	110-120 V	50 Hz	60 Hz	12 V AC	24 V DC	DMX	DMX/ RDM	Plug and Spray
Varionaut 400 /DMX/02	●	●	●	●	○	○	●	●	○	○	●	●	●

Varionaut 400 /DMX/02

The Varionaut 400 /DMX/02 is the most powerful DMX/RDM compatible pump. This individually adjustable pump generates highly dynamic water features with exact repeatable fountain heights. The maximum fountain height of approx. 10 m is achieved in just 1.1 seconds with the Comet 15 - 15.

The two DMX/RDM connections (1 x input, 1 x output) including capillary lock are located directly on the pump. The second DMX/RDM connector allows other devices (such as other pumps or LED fixtures) to be interconnected. The patented IP 68 waterproof connector makes installation safer, easier and faster.
In addition, this individually addressable or controllable pump is supplied with a power cable for power supply.

Innovation – made by OASE

Varionaut 400 /DMX/02

Product characteristics at a glance

- High dynamic fountain pump
- Frost protected up to -20° C
- Largest DMX/RDM Varionaut pump
- Individual controllable closed loop speed control via DMX with continuous flow rate
- 230 V AC pump for indoor and outdoor
- Suitable for wet or dry installation
- Power consumption max. 730 W
- 10 m power cable with plug (46421), 20 ft power cable without plug (33256)
- 2 DMX/RDM ports (1 x input/ 1 x output) directly at the pump
- IP 68 rated
- DMX/RDM capable

Product video

Varionaut 400 /DMX/02

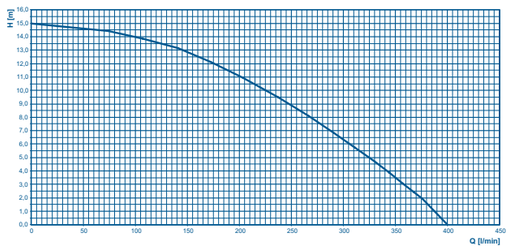

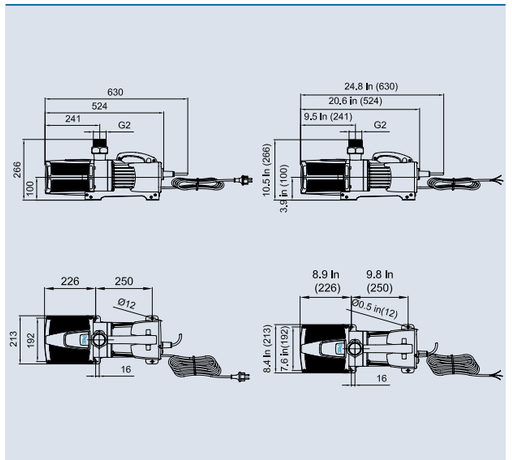

46421 Varionaut 400 /DMX/02 33256 Varionaut 400 /DMX/02

Accessories (must be ordered separately)

	Order no.
Comet 15 - 15 Silver (see page 66)	48276
Cluster Eco 15 - 38 (see page 72)	45480
Reducing sleeve 20 x 15 (see page 259)	51030
Connecting cable DMX /01 (see page 194)	**Order no.**
Connecting cable DMX / 1.0 m /01	12368
Connecting cable DMX / 1.5 m /01	49628
Connecting cable DMX / 3.0 m /01	12369
Connecting cable DMX / 5.0 m /01	12371
Connecting cable DMX / 10.0 m /01	12372
Connecting cable DMX / 20.0 m /01	12373
End resistant for BUS-system DMX/01	12007
DMX-Box /01	57646
WECS II 512 /DMX/02 (see page 206)	56491
WECS II 1024 /DMX/02 (see page 206)	56492
WECS II 2048 /DMX/02 (see page 212)	56507

Varionaut 400 /DMX/02				
Certificate		VDE, CE		MET (US)
Motor Type/ Electronic		230 V EC-Motor, DMX controlled (DMX/RDM enable)		230V EC-Motor, DMX controlled (DMX/RDM enable)
Hmax	[m]	15	[ft]	49
Qmax	[l/min]	400	[gph]	6340
Qmin (Offset-mode – DMX 0)	[l/min]	30	[gph]	475
Qmax	[l/h]	24000	[gpm]	106
Power max.	[W]	730	[W]	730
Max. apparent power consumption	[VA]	800	[VA]	800
Power input at highest fountain	[W]	730	[W]	730
Power input at lowest fountain	[W]	25	[W]	25
Nominal current	[A]	3.5	[A]	3.5
Starting current (0.01 Sec.)	[A]	21	[A]	21
Nominal voltage	[V/Hz]	220-240 / 50-60	[V/Hz]	220-240 / 50-60
Dynamic behaviour speed: (time to reach full fountain height from 0 – 100 % - with Comet 15 - 15)	[s]	1.1	[s]	1.1
Run up time	[s]	< 3.0	[s]	<3.0
Max. Powering up / min. Off time	[s]	1 x per minute / 10 s	[s]	1 x per minute / 10 s
Environmental conditions: submersible application	[°C]	Water temperature: min. 4 to max. 35	[°F]	Water temperature: min. +39.2 to max. +95
Environmental conditions: dry application	[°C]	Ambient temperature: max. 30°C with natural convection, max. 40°C with forced convection, no direct sun exposure permitted	[°F]	Ambient temperature: max. 86°F with natural convection, max. 104°F with forced convection, no direct sun exposure permitted
Protection category		IP 68		IP 68
Protection class (EN 61140)		I		I
Mounting position		horizontal		horizontal
Minimum distance to nearby devices	[mm]	100	[ft]	0.33
Installation (on site)		4 screws max. M10		4 screws max. M10
Immersion depth max.	[m]	4	[ft]	13.1
Suction side connection	[inch]	Thread G 2 (external thread)	[inch]	Thread G 2 (external thread)
Pressure side connection	[inch]	Thread G 2 (external thread)	[inch]	Thread G 2 (external thread)
Filter housing		Plastic / stainless steel 1.4301 (AISI 304)		Plastic / stainless steel 1.4301 (AISI 304)
DMX connection		2 x (1 x input / 1 x output)		2 x (1 x input / 1 x output)
Input power		10 m power cable with plug		20 ft power cable without plug
Number of DMX-channels	[pieces]	2 channels (control channel, speed channel)		2 channels (control channel, speed channel)
Dimensions incl. filter (LxWxH)	[mm]	524 x 213 x 266	[inch]	20.6 x 8.4 x 10.5
Material		Plastic / stainless steel		Plastic / stainless steel
Weight	[kg]	16.5	[lb]	36.4
Order no.		46421		33256

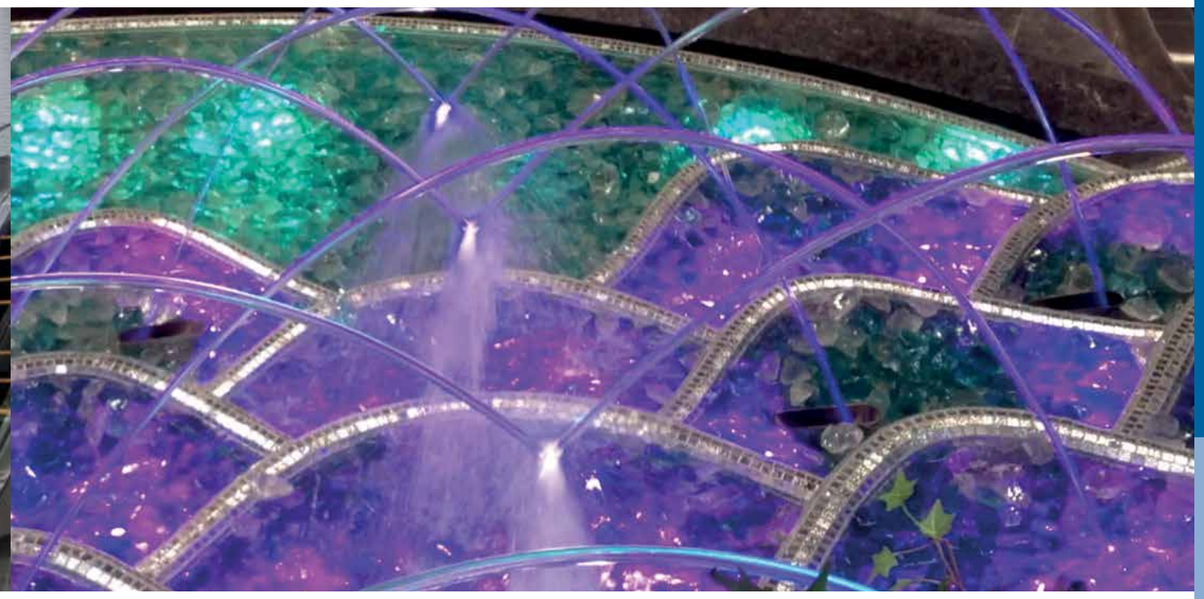

	Fresh Water	Pool Water	Sea Water	220-240 V	400 V	110-120 V	50 Hz	60 Hz	12 V AC	24 V DC	DMX	DMX/ RDM	Plug and Spray
Aquarius Universal Premium	●	○	○	●	○	○	●	○	○	○	○	○	○

Aquarius Universal Premium 5000 – 12000

Product characteristics at a glance

- Extremely quiet operation
- Easy adjustment of the flow rate
- Integrated thermal protection – from 600 onwards
- Suitable for wet or dry installations
- Energy-efficient thanks to low energy consumption
- Electronically adjustable
- Frost protected up to –20°C
- High-quality workmanship with stainless steel
- Priming even at low water levels
- Removable pedestal for installation where space is at a premium

Flow rate adjustment
Easy mechanical adjustment via the flow regulator on the Aquarius Universal Eco 5000 - 12000. Simultaneously dry set-up is also possible.

Aquarius Universal Premium 5000

Aquarius Universal Premium 5000 – 12000

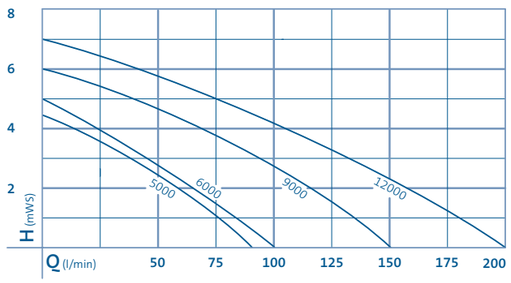

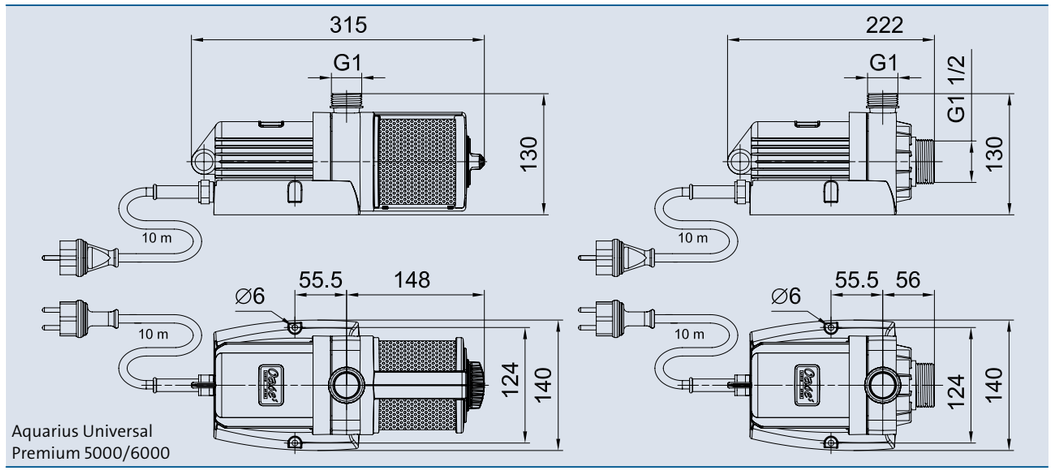

Aquarius Universal Premium 5000/6000

Aquarius Universal Premium		5000	6000	9000	12000
Dimensions (L x W x H)	[mm]	315 x 140 x 130		337 x 161 x 158	
Filter intake surface	[cm²]	200	200	223	223
Mesh width	[mm]	5	5	5	5
Rated voltage	[V/Hz]	220 - 240 V / 50 Hz			
Power consumption	[W]	85	110	195	270
Power cable length	[m]	10			
Net weight	[kg]	3.40	3.50	5.40	5.45
Max. flow rate	[l/min]	83	100	150	200
Max. flow rate	[l/h]	5000	6000	9000	12000
Max. head height	[m]	4.50	5.00	6.00	7.00
Connection, pressure-side	[inch]	1		1 ½	
Connection, suction-side	[inch]	1 ½			
Connection for hoses	[inch]	1, 1 ¼, 1 ½			
Filter intake surface	[cm²]	200		223	
Electronic adjustment		Yes			
Order no.		56617	56637	56876	56879

	Fresh Water	Pool Water	Sea Water	220-240 V	400 V	110-120 V	50 Hz	60 Hz	12 V AC	24 V DC	DMX	DMX/ RDM	Plug and Spray
ProfiMax 7000	●	○	○	○	○	●	○	●	○	○	○	○	○

ProfiMax 7000

ProfiMax is ideal for larger installations that demand higher flow rates or applications where the pump might be exposed to debris in the water. ProfiMax excels under these conditions. In addition, ProfiMax can be converted for use in in-line installations. As with all OASE pumps its feature is state-of-the-art motor technology with built-in overheating protection.

Product characteristics at a glance

- Easily handles coarse debris up to 3/8 in.
- Large strainer size reduces maintenance.
- Ideal for large-scale filtration and water courses
- Submersed or in-line operation
- Electronically adjustable
- Frost protected up to –20°C

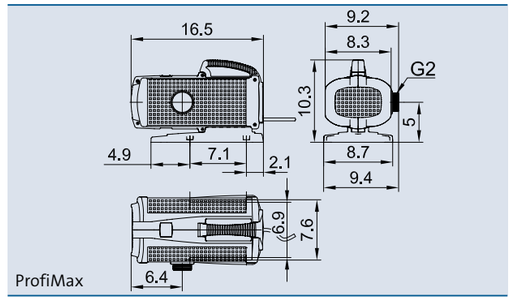

ProfiMax

Flexible operation
Rugged design allows for operation in a high flow skimmer such BioSys Skimmer XL or directly in the pond.

ProfiMax

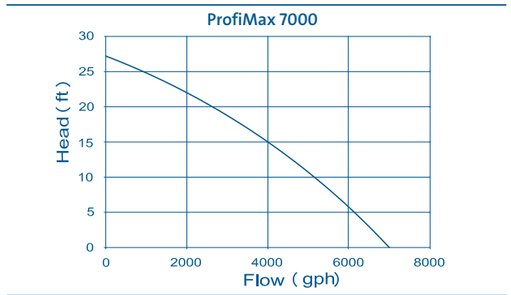

ProfiMax		7000
Flow rate max.	[gph]	7000
Flow rate max.	[gpm]	117
Head max.	[ft]	28
Intake Connection	[inch]	2
Outlet Connection	[inch]	2
Filter intake surface	[sq. in.]	251
Mesh width	[inch]	0.263
Power Consumption	[W/A]	660 / 5.50
Operating Voltage	[V/Hz]	110-120 / 60
Connection Cable	[ft]	20
Dimensions (L x W x H)	[inch]	16.50 x 9.40 x 10.50
Weight	[lbs.]	33
Order no.		50296

	Fresh Water	Pool Water	Sea Water	220-240 V	400 V	110-120 V	50 Hz	60 Hz	12 V AC	24 V DC	DMX	DMX/ RDM	Plug and Spray
Profinaut 6000	●	○	○	○	○	●	○	●	○	○	○	○	○

Profinaut 6000

An excellent pump for producing impressive water displays in demanding applications. Head heights of up to 40 ft. make it a true powerhouse.

Product characteristics at a glance

- Ergonomic handle, aligned with the pump's center of gravity, facilitates transport and installation.
- Compact, innovative stainless steel design.
- Frost protected up to –20°C
- Suitable for wet and dry installations
- Includes adapter set for connecting all 1 in. and 1 1/2 in. nozzles from the OASE range.
- Highly stable with excellent performance.

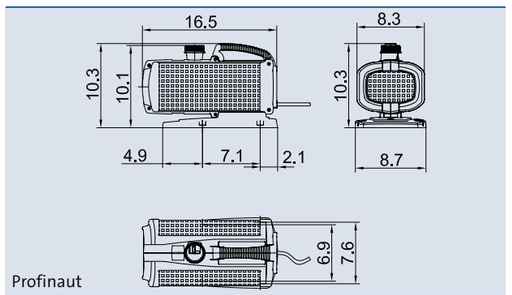

Profinaut

Versatile application
Up to three Profinaut pumps can be installed in a BioSys Skimmer XL for very high water circulation volume and skimming action.

Profinaut

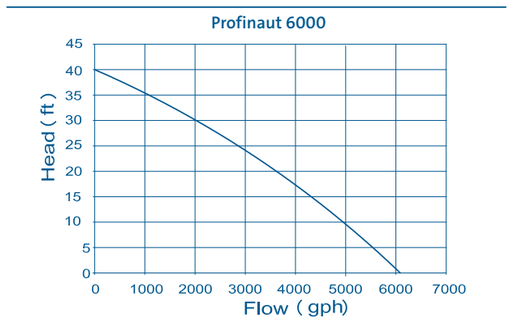

Profinaut		6000
Flow rate max.	[gph]	6100
Flow rate max.	[gpm]	102
Head max.	[ft]	40
Outlet Connection	[inch]	2
Filter intake surface	[sq. in.]	256
Mesh width	[inch]	0.263
Power Consumption	[W/A]	720 / 6.1
Operating Voltage	[V/Hz]	110-120 / 60
Power Cable	[ft]	20
Dimensions (L x W x H)	[inch]	17 x 10 x 11
Weight	[lbs.]	33
Order no.		57097

	Fresh Water	Pool Water	Sea Water	220-240 V	400 V	110-120 V	50 Hz	60 Hz	12 V AC	24 V DC	DMX	DMX/ RDM	Plug and Spray
USP 412 W	●	○	○	●	○	○	●	○	○	○	○	○	○
USP 413 D	●	○	○	○	●	○	●	○	○	○	○	○	○
USP 512 W	●	○	○	●	○	○	●	○	○	○	○	○	○
USP 513 D	●	○	○	○	●	○	●	○	○	○	○	○	○
USP 662 W	●	○	○	●	○	○	●	○	○	○	○	○	○
USP 813 D	●	○	○	○	●	○	●	○	○	○	○	○	○
USP H 673 D	●	○	○	○	●	○	●	○	○	○	○	○	○

USP 412 – USP 813

These pumps are true universal talents: Set up underwater they perform their work as submersible motor-driven pumps. They work just as reliably if they are set up in a separate pump chamber.

The robust wet-running canned motors have static seals. Inrushing water poses no problem for these pumps because they can be submersed. In addition thanks to the high-quality materials, such as special ceramics, stainless steel, and tombac, they are durable and offer an extremely long service life.

Product characteristics at a glance

- Suitable for wet and dry installations
- Robust wet-running canned motor
- Wear-free static seals
- Bearings and motor shaft are made of special ceramics
- Shaft, can and pump impeller are made of stainless steel
- Housing made of corrosion resistant tombac alloy

USP 412 W

USP 813 D

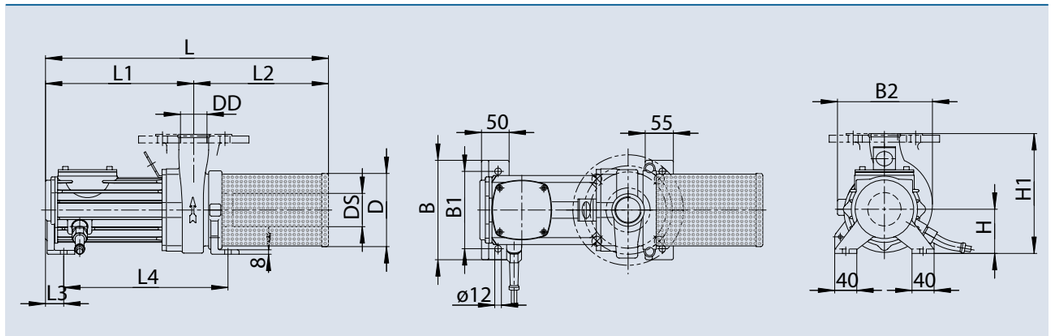

USP

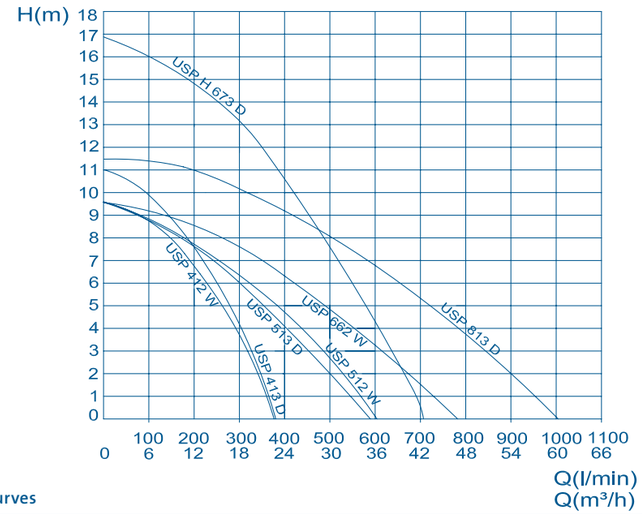

Pump performance curves

		USP 412 W	USP 413 D	USP 512 W	USP 513 D	USP 662 W	USP 813 D	USP H 673 D
Dimensions (LxWxH)	[mm]	512 x 180 x 220	512 x 180 x 220	551 x 240 x 280	551 x 240 x 280	679 x 240 x 310	696 x 240 x 290	679 x 240 x 310
Voltage	[V/Hz]	1x 230 / 50	3x 400 / 50	1x 230 / 50	3x 400 / 50	1x 230 / 50	3x 400 / 50	3x 400 / 50
Power output	[kW]	0.52	0.49	0.60	0.77	1.12	1.50	1.55
Current	[A]	2.20	0.95	3.30	1.30	4.70	2.90	3.10
B	[mm]	180	180	240	240	240	240	240
B1	[mm]	140	140	200	200	200	200	200
B2	[mm]	178	178	210	210	230	255	230
DD	[inch]	1 ½	1 ½	2	2	2 ½	DN 80	2 ½
DS	[inch]	2	2	2 ½	2 ½	3	3	3
D	[mm]	130	130	150	150	170	200	170
H	[mm]	80	80	115	115	115	115	115
H1	[mm]	220	220	280	280	310	290	310
L	[mm]	512	512	551	551	679	696	679
L1	[mm]	268	268	252	252	305	308	305
L2	[mm]	244	244	299	299	374	388	374
L3	[mm]	33	33	36	36	36	36	36
L4	[mm]	297	297	285	285	330	347	330
Cable length	[m]	10						
Material		Tombac / stainless steel 1.4301 / Brass (AISI 304)						
Filter intake surface	[cm²]	970	970	1030	1030	1357	2200	1357
Mesh width	[mm]	5	5	5	5	5	5	5
Weight	[kg]	22	22	31	31	37	42	37
Order no.		**55721**	**55720**	**55727**	**55726**	**55732**	**55735**	**56506**

Pumps
Classic Pumps

	Fresh Water	Pool Water	Sea Water	220-240 V	400 V	110-120 V	50 Hz	60 Hz	12 V AC	24 V DC	DMX	DMX/ RDM	Plug and Spray
BT 2.2 - 40 to BT 15.0 - 125 IE3	●	○	○	○	●	○	●	○	○	○	○	○	○

BT 2.2-40 to BT 15.0-125 IE3

BT block centrifugal pumps are strong, uncomplicated pumps that are used wherever space is limited.

Product characteristics at a glance

- Dimensions and connections in accordance with DIN standards
- Motor in accordance with new IE3-technology
- Maintenance-free slide ring seal
- Enclosed impeller with high efficiency
- Dry installation only
- IP 55 rated

Thanks to their compact design they have very small space requirements. All dimensions and connections are DIN standard; this ensures universal implementation. BT block centrifugal pumps are normal suction centrifugal pumps in spiral housings for dry installation with a motor in accordance with IEC standards. They comprise few parts that are important for their function, which reduces maintenance work to a minimum.

BT 2.2-40-4

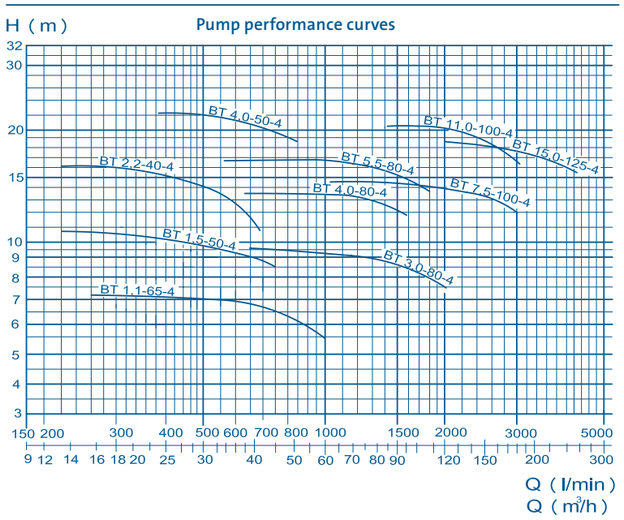

The few maintenance tasks that are necessary are executed quickly and easily. Thanks to the low rpm the pumps are very quiet in operation and are more durable. The enclosed impeller is highly efficient.

The robust BT block centrifugal pumps are delivered as standard in grey cast iron. Upon request these pumps can also be delivered in special materials, such an impeller as bronze.

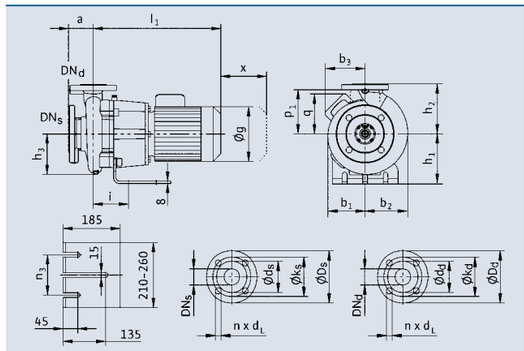

Design V1

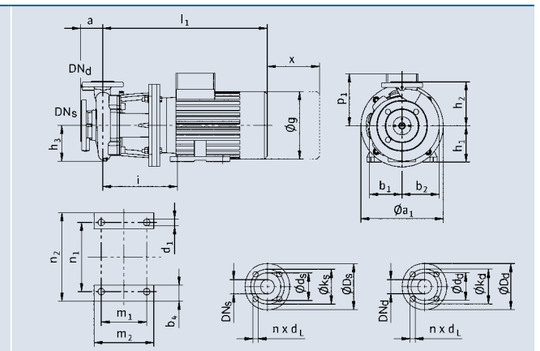

Design B35

IE 3		2.2-40-4	1.5-50-4	4.0-50-4	1.1-65-4	3.0-80-4	4.0-80-4	5.5-80-4	7.5-100-4	11.0-100-4	15.0-125-4
Dimensions (LxWxH)	[mm]	611x360x296	556x340x274	696x405x360	564x360x298	653x385x356	733x450x367	789x382x367	795x412x410	832x440x432	1011x515x514
Power output	[kW]	2.20	1.50	4	1.10	3	4	5.50	7.50	11	15
Current	[A]	4.90	3.60	8.20	2.30	6.50	8.20	11.10	14.90	22.00	29.80
Voltage	[V/50 Hz]	400	400	400	400	400	400	400/ YD	400/ YD	400/ YD	400/ YD
Design		V1	V1	V1	V1	V1	V1	B35	B35	B35	B35
DNs	[mm]	65	65	65	80	100	100	100	125	125	150
DNd	[mm]	40	50	50	65	80	80	80	100	100	125
a	[mm]	100	100	100	100	125	125	125	125	140	140
a_1	[mm]							300	300	350	350
b_1	[mm]	145	127	174	136	160	170	170	176	200	252
b_2	[mm]	151	147	186	162	196	197	197	211	232	294
b_3	[mm]		144		144	155					
b_4	[mm]							53	53	60	60
d_1	[mm]							12	12	15	15
g	[mm]	217	193	246	193	220	246	279	312	312	312
h_1	[mm]	180	160	200	160	180	200	132	132	160	180
h_2	[mm]	180	180	225	200	225	250	250	280	280	355
h_3	[mm]	145	152	179	155	178	178	178	196	219	250
i	[mm]	124	122	131	130	137	143	318	311	383	345
l_1	[mm]	512	455	621	463	528	633	634	698	745	831
n_3	[mm]	180	130	180	130	130					
m_1	[mm]							140	178	210	254
m_2	[mm]							180	218	256	300
n_1	[mm]							216	216	254	254
n_2	[mm]							256	256	300	300
p_1	[mm]	160		188			188	188	250	250	250
q	[mm]		144		144	155					
x	[mm]	105	120	110	120	135	120	120	120	130	170
Ds	[mm]	185	185	185	200	220	220	220	250	250	285
ks	[mm]	145	145	145	160	180	180	180	210	210	240
ds	[mm]	118	118	118	132	156	156	156	184	184	211
ns	[mm]	4	4	4	8	8	8	8	8	8	8
dLs	[mm]	19	19	19	19	19	19	19	19	19	23
Dd	[mm]	150	165	165	185	200	200	200	220	220	250
kd	[mm]	110	125	125	145	160	160	160	180	180	210
dd	[mm]	84	99	99	118	132	132	132	156	156	184
nd	[mm]	4	4	4	4	8	8	8	8	8	8
dLd	[mm]	19	19	19	19	19	19	19	19	19	19
Material		GG	GG	GG	GG	GG	GG	GG	GG	GG	GG
Weight	[kg]	76	60	96	61	95	106	143	156	215	245
Order no.		**45305**	**45306**	**45307**	**45308**	**45309**	**45310**	**45311**	**45312**	**45313**	**45314**

	Fresh Water	Pool Water	Sea Water	220-240 V	400 V	110-120 V	50 Hz	60 Hz	12 V AC	24 V DC	DMX	DMX/ RDM	Plug and Spray
SPA 22 - SPA 280	●	●*	●*	○	●	○	●	○	○	○	○	○	○

* Pool-, seawater product version on request

SPA 22 - SPA 280

These multistage structured submersible motor-driven pumps are the powerful heart for high delivery heads.

These pumps can supply single fountains as well as group fountains with sufficient water volumes and pressure for larger spray heights. Thus they are preferred in installations in which the delivery head of single-stage pumps are no longer required.

*Contact OASE before ordering a Pool or a Sea Water SPA pump. Technical specifications of this model (58903) may vary.

Product characteristics at a glance

- Extremely shallow and slender design
- Multistage submersible motor pump
- Suitable for higher delivery heights
- High-volume filter basket
- Good stability
- Robust wet-running canned motor
- All parts made of stainless steel

SPA 58-33

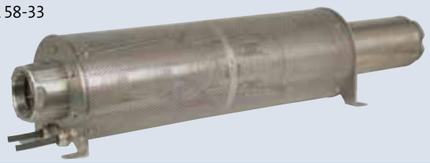

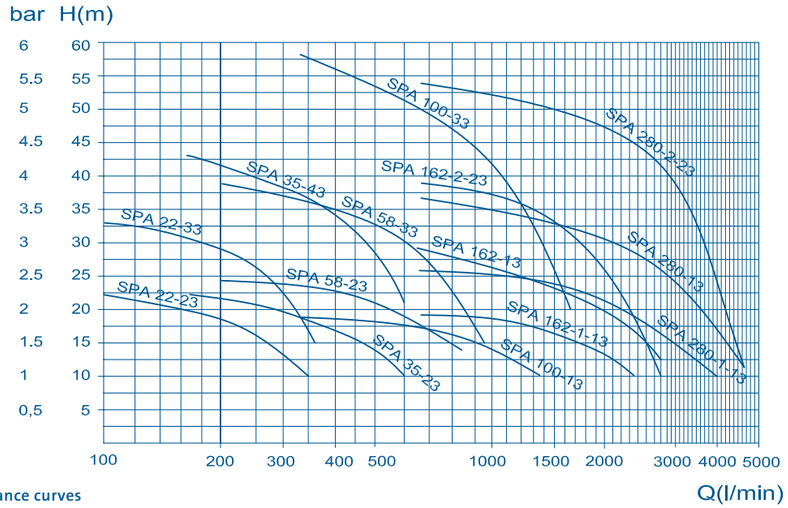

Pump performance curves

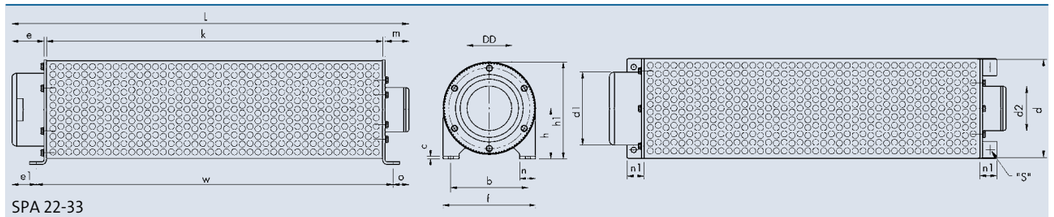

SPA 22-33

		SPA 22-23	SPA 22-33	SPA 35-23	SPA 35-43	SPA 58-23	SPA 58-33	SPA 100-13
Dimensions (LxWxH)	[mm]	680 x 225 x 229	888 x 225 x 229	898 x 225 x 229	1211 x 225 x 229	970 x 225 x 229	1150 x 225 x 229	1162 x 310 x 314
Voltage	[V/Hz]	3 x 400 / 50						
Power output	[kW]	1.10	2.20	2.20	4.0	3	5.50	5.50
Current	[A]	2.75	6	6	9.6	7.85	13.60	13.60
b	[mm]	189	189	189	189	189	189	274
c	[mm]	4	4	4	4	4	4	4
DD (Rp)	[inch]	2.5	2.5	3	3	3	3	5
d	[mm]	225	225	225	225	225	225	310
d1	[mm]	131	131	131	131	141	150	186
d2	[mm]	95	95	95	95	95	138	138
e	[mm]	80	80	80	80	100	100	120
e1	[mm]	57	57	57	57	77	77	97
f	[mm]	229	229	229	229	229	229	314
h	[mm]	123	123	123	123	123	123	165
h1	[mm]	237	237	237	237	237	237	322
k	[mm]	500	500	500	750	750	750	750
L	[mm]	680	888	898	1211	970	1150	1162
m	[mm]	92	300	310	373	112	292	284
n	[mm]	40	40	40	40	40	40	40
n1	[mm]	44	44	44	44	44	44	44
o	[mm]	69	277	287	350	89	269	261
w	[mm]	554	554	554	804	804	804	804
s	[mm]	11	11	11	11	11	11	11
Cable length	[m]	10						
Material		Stainless steel 1.4301 (AISI 304)						
Weight	[kg]	20	28	28	37	31	54	66
Order no.		53834	53835	53839	53841	53845	53846	53852

		SPA 100-33	SPA 162-1-13	SPA 162-13	SPA 162-2-23	SPA 280-1-13	SPA 280-13	SPA 280-2-23
Dimensions (LxWxH)	[mm]	1508 x 310 x 314	1165 x 310 x 314	1255 x 310 x 314	1441 x 310 x 314	1489 x 310 x 314	1544 x 310 x 314	1910 x 310 x 314
Voltage	[V/Hz]	3x 400 / 50						
Power output	[kW]	11	7.50	11	13	15	18.50	30
Current	[A]	24.80	17.60	24.80	30	34	42	66.50
b	[mm]	274	274	274	274	274	274	274
c	[mm]	4	4	4	4	4	4	4
DD (Rp)	[inch]	5	6	6	6	6	6	6
d	[mm]	310	310	310	310	310	310	310
d1	[mm]	186	218	218	218	247	247	247
d2	[mm]	138	138	138	138	138	138	138
e	[mm]	120	120	120	120	120	120	120
e1	[mm]	97	92	92	92	96	96	96
f	[mm]	314	314	314	314	314	314	314
h	[mm]	165	165	165	165	165	165	165
h1	[mm]	322	322	322	322	322	322	322
k	[mm]	1000	750	750	1000	1000	1250	1500
L	[mm]	1508	1165	1255	1441	1489	1544	1910
m	[mm]	380	287	377	313	361	166	282
n	[mm]	40	40	40	40	40	40	40
n1	[mm]	44	44	44	44	44	44	44
o	[mm]	357	269	359	295	339	144	260
w	[mm]	1054	804	804	1054	1054	1304	1554
s	[mm]	11	11	11	11	11	11	11
Cable length	[m]	10						
Material		Stainless steel 1.4301 (AISI 304)						
Weight	[kg]	91	85	93	103	104	111	132
Order no.		53854	53858	53859	53860	53864	53865	53866

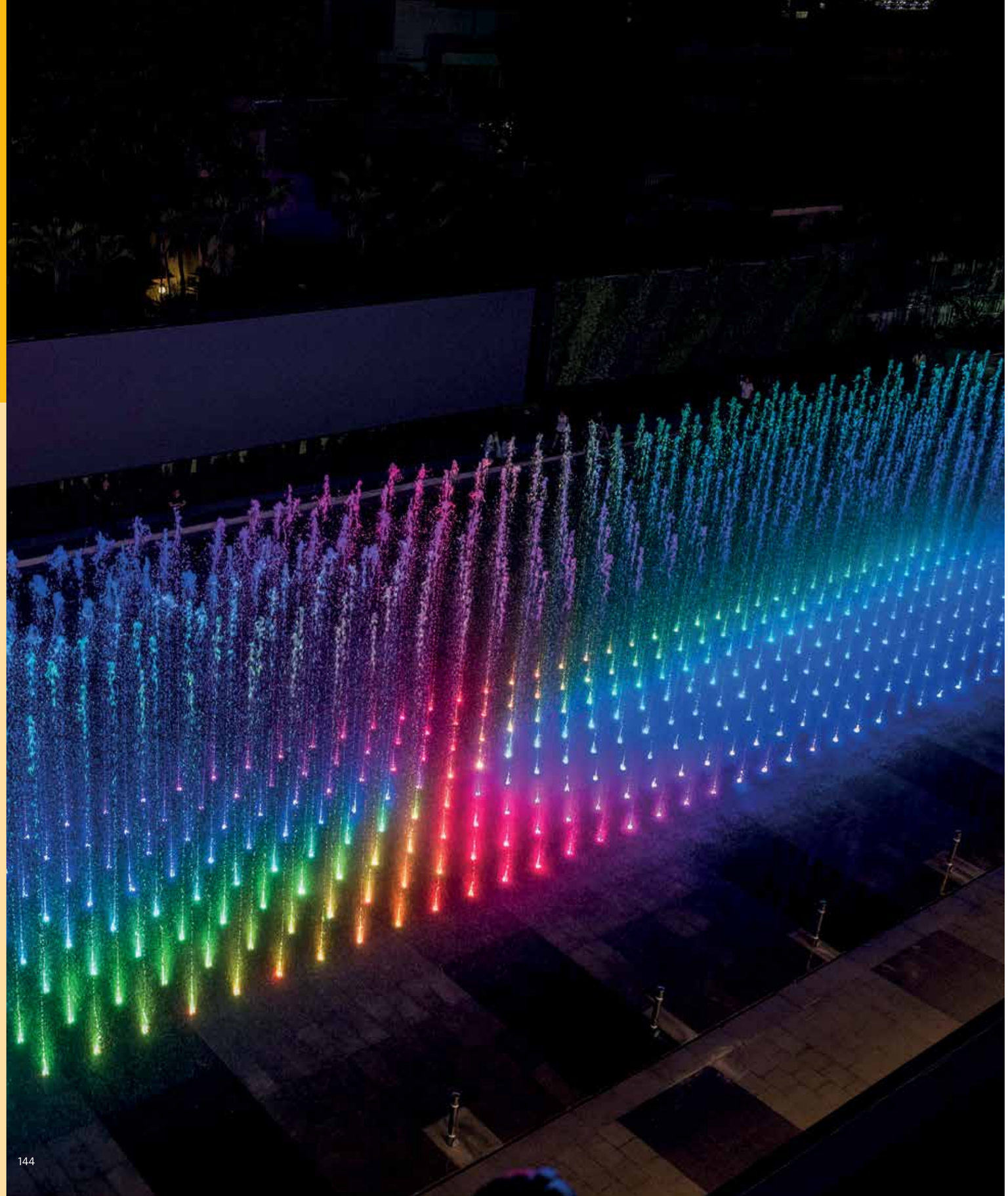

LED-Illumination

Light creates atmosphere. Illumination has an incredible effect, particularly in interaction with water. Atmospheric illumination is imperative for the planning of a breathtaking installation. It accentuates and emphasizes surfaces and show elements. Appealing illumination comes about through the right mix of contrast, light colours and effects. OASE LEDs are made for every application, whether in the water or on a pathway in a park. They are watertight, and vehicles can even drive over them. Therefore, the selection of the right light should be well considered – we can help you. Use our LED configurator and find your individual solution.

LED TECHNOLOGY

154 LED spotlight, coloured
168 LED spotlight, white
176 LED-Stripe
178 Lamp holder
180 LED modules

Illumination

New products

Illumination | accessories

Page 152 **LED Configurator**

LED-Illumination

In addition to the OASE standard assortment, we offer further options to configurate LED projectors according to your wishes and requirements with the LED Configurator. For the correct selection of a special light you have to fill in a set of technical parameters.

Our LED lights are characterized by the following features

	IP 68	Fresh Water	Pool Water	Sea Water	24 V DC	DMX	DMX/ RDM	Plug and Spray
LED spotlight, white	●	●	●	●	●	○	○	●
LED spotlight, coloured	●	●	●	●	●	●	●	●

For an application based defintion of a particular LED light a set of parameters has to be keyed into the configurator.

The LED standard range at a glance:

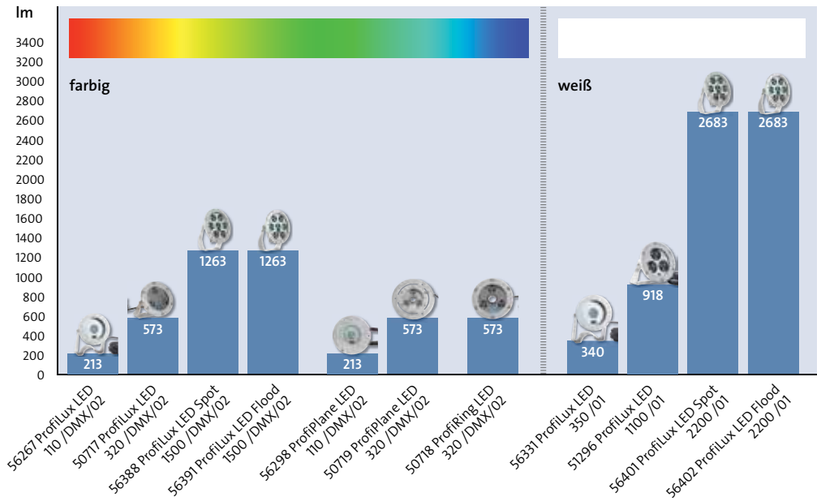

LED light types - the size determines the brightness:
OASE LED lights are classified according to their sizes as LED I, LED II and LED III. The performance / light output increases with size.

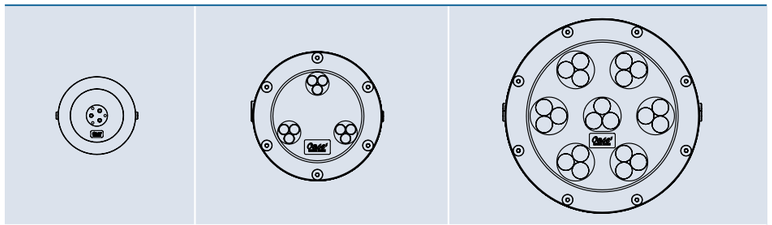

Small	Medium	Large
LED I / 1 Cluster	LED II / 3 Cluster	LED III / 7 Cluster

Housing variants - the type of installation determines the housing

	ProfiLux	LED light with bracket
	ProfiRing	LED light with a central opening to accomodate a nozzle
	ProfiFloor	LED light for floor and wall-mounting. Max. acceptable static load imposed by vehicles or sim. : 1.5 tons
	ProfiPlane	Floor and wall-mounted LED light with a central opening to accomodate a nozzle. Max. acceptable static load imposed by vehicles or sim. : 1.5 tons

Color creates atmosphere & White is not White

White is not White
White lights can be classified into different shades. According to their color temperature expressed in ° Kelvin they can differ from warm over neutral up to cold white. Which offers the chance to stage architectural structures, plants and even fountains in different ways. While the standard range is limited to neutral white (4000 K), the LED Configurator allows you to choose warm or cold white tones as well.

Warm white < 3300 K	Neutral white 3300 – 5300 K	Cold white > 5300 K
Especially suitable for: • Environments with warm colors, such as red, brown, yellow • Natural colored walls and rocks	**Especially suitable for:** • Environments with cold colors, such as green • Architectural structures	**Especially suitable for:** • Modern buildings and structures

Play of colors for magic WOW moments
OASE offers a complete range of RGB and RGBW color LED lights for water feature illumination. All these lights are controlled via DMX which allows through mixture and intensity variation of each of the 3 base colors to create an almost unlimited number of different shades. Additionally the integrated strobe function can contribute to achieve an even more breathtaking play of light.

Even for the color light range our configurator offers additional options. For instance the standard blue (465nm) can be replaced by the more intense and darker royal blue which leads to more contrast and stronger accentuation in the fountain show. Furthermore the color Amber can be chosen for a luminaire configuration. Amber is characterized by a mixture of yellow and orange tones and contributes to create a warm atmosphere.

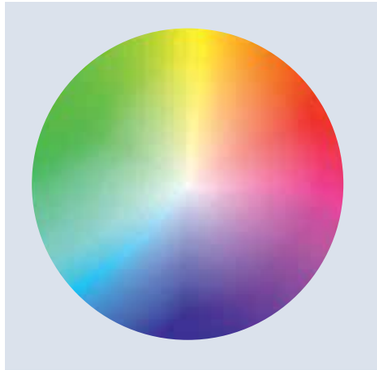

- Red 650 nm
- Green 520 nm
- Blue 465 nm
- Royal Blue 450 nm
- Neutral Weiß (4000 K)
- Amber 590 nm

Beam angle - set the right accents
The choice of the right beam angle depends on the type of water feature, you want to illuminate. Aim is to achieve a good and even illumination of the feature under consideration. Examples:

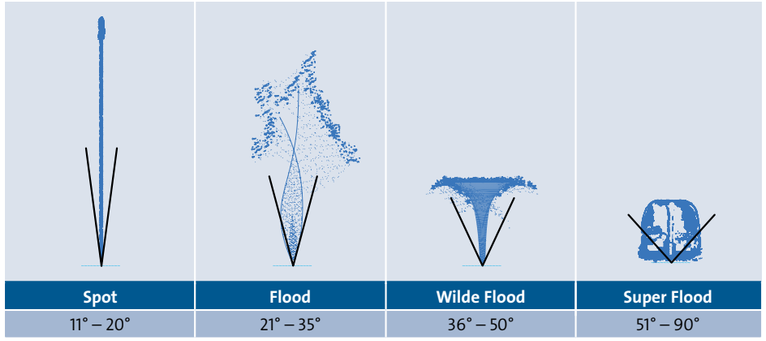

LEDiL

We only rely on branded lenses and branded LED for our light fixtures.

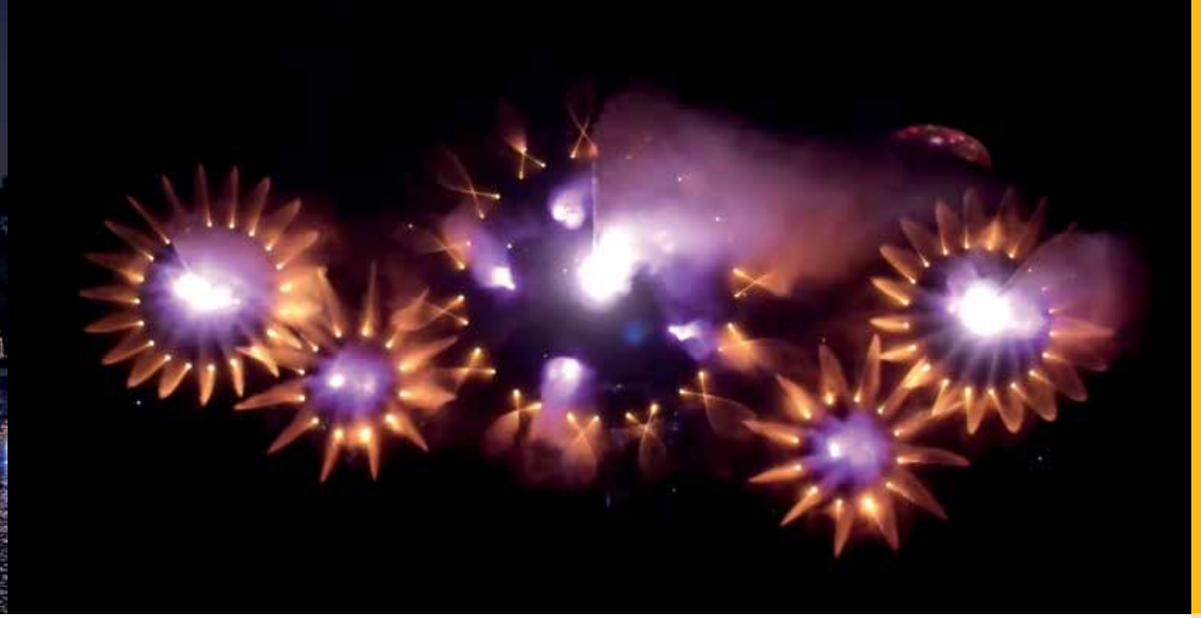

Illumination

LED Configurator - in a few steps to an individually customized light.

The LED configurator is based on the standard range of lights. For special adaptation according to your individual needs it offers a variety of other options.

The individual properties and their meaning are explained below.

Type	Here a certain light power category and physical size represented through LED I; LED II; LED III, is chosen
Housing	The choice of the housing is determined by the kind of installation. Depending on the application, a simple light with bracket, or a light for floor or wall installation may be the right choice.
Material	Whether stainless steel, or bronze - both materials are available but have to satisfy your aesthetic needs and water quality requirements
Control	For monochrome lights, in addition to switching on and off, there is also the option of dimming via DMX. All colored lights are DMX / RDM compatible
Color	The color spectrum of the configurator goes beyond the standard range. In addition to the seven different shades of white from warm, neutral to cold white, also single-color lights in red, red-orange, blue, or royal blue can be created. Multi-color lights can be equipped with white (RGBW) or amber (RGBA / RGBWA). Additionally the strobe effect can be added.
Beam Angle	From spot to super flood, the right beam angle can be found for all applications.
Connection Type	Depending on the application, only plugs, cables with plugs and cables without plugs can be chosen
Cable length	Cable lengths of the hybrid or power cables can be defined up to 50 m
Special Request	If you have additional special requirements, they can be noted here, we will check feasibility for you

Application example:
Request: colored LED light including amber for illuminating a 30 m high single-jet

Type	LED III
Housing	ProfiLux
Material	Stainless steel 1.4404 (AISI 316 L)
Control	Colored DMX controllable
Color	RGBWA
Beam Angle	11°
Connection Type	Hybrid socket (on the housing)
Cable Length	No cable = Hybrid socket
Additional special request	No Request
Required quantity	5

The result of this configuration is the code:
ProfiLux-III-C-RGBWA-11-A-7-S-N

With the help of this code a request for a price quotation and the lead time can now be submitted to OASE.

	Fresh Water	Pool Water	Sea Water	220-240 V	400 V	110-120 V	50 Hz	60 Hz	12 V AC	24 V DC	DMX	DMX/ RDM	Plug and Spray
ProfiLux LED 110	●	●	●	○	○	○	○	○	○	●	●	●	●

ProfiLux LED 110 /DMX/02

The ProfiLux LED 110 /DMX/02 is the new, tiny, compact and powerful RGB-LED light with 213 lumen and a beam angle of 25°.

The compact LED-light (Ø = 75. 2 mm) has a high quality stainless steel housing and is suitable for fresh water, pool water and sea water application (for definition see page 260). Equipped with a temperature control and a thermal protection, the LED light can also be installed dry. The lifetime of these lights is up to 100,000 h.*
The light is supplied with a bracket for ground installation as well as for nozzle tube mounting (designed for socket 10 (51018)). The RGB-LED light has a 1 m long connecting cable with a waterproof hybrid (power/data) connector.
The ProfiLux LED light can be controlled via DMX with the underwater LED Driver /DMX/02 (50720) (not in scope of supply). The basic colours of the LED-RGB-lights are measured individually for their brightness. The LED-Driver ensures equal brightness for all lights in the system, thereby creating a homogeneous colour combination.

ProfiLux LED 110 /DMX/02

Product characteristics at a glance

- **Energy efficient LED-RGB-light with bracket for ground installation and nozzle tube mounting.**
- **213 Lumen with a beam angle of 25°, max. 6 Watt**
- **Temperature controlled high quality LED for an extra-long life of up to 100,000 h.***
- **Wet and dry installation – water proof in accordance with IP68**
- **For fresh water, pool water and sea water**
- **External electronic in a separate control box / junction box – waterproof connector, easy to connect.**
- **DMX/RDM-capable in combination with the Underwater LED Driver /DMX/02 (50720)**
- **Individual measurement of the basic colours of the LED-RGB lights and the use of the Underwater LED Driver /DMX/02 (50720) guarantees equal brightness of all lights in the system and a homogeneous colour combination.**
- **Galvanic isolation between the DMX and 24 V DC power**
- **Stroboscope effect, synchronised via DMX**

*In case of underwater application, an intelligent heat management and quality LED enables a lifetime of up to 100.000 hrs. This claim does not entitle to a guarantee.

Further individual possibilities for these LED light can be found in the LED configurator on our homepage.
www.oase-livingwater.com/en_EN/portal/login/

The variety of colour combinations and the stroboscope effect reveal their full effect in combination with dynamic water effects.
The Underwater LED Driver /DMX/02 (see page 198) is required for a DMX/RDM-capable application of the ProfiLux LED light . In addition a RDM-capable controller , like WECS II (WECS II 512, WECS II 1024 or WECS II 2048, see page 206-212), is also needed.
The ProfiLux LED light has a 1 m long connecting cable with a hybrid connector for connecting it to the Underwater LED Driver /DMX/02. A 3.0 m or 7.5 m hybrid extension cable per light can be used for extending the connection (see page 196). Up to 4 LEDs can be individually controlled with this external Underwater LED-Driver. The Underwater LED Driver /DMX/02 is equipped with two connection boxes – one for the power supply with 24 V DC and the other one for a DMX/RDM-data cable. The special connection technology makes a watertight pluggable cabling possible.
The use of the hybrid connection box can lead to an economic advantage of the system. The lights which are connected to the hybrid box always have the same colour. (see system diagram.)

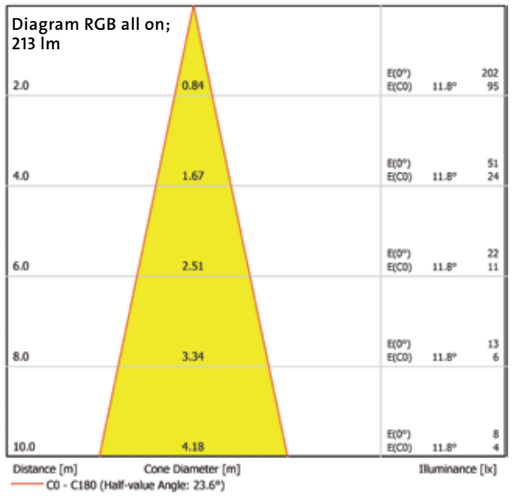

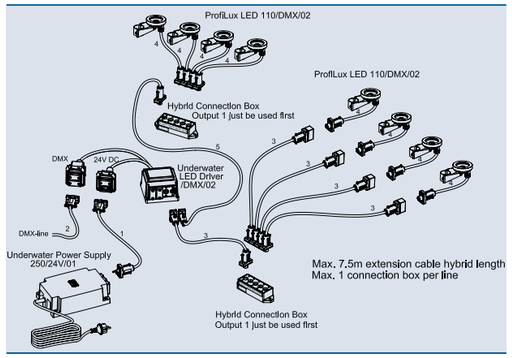

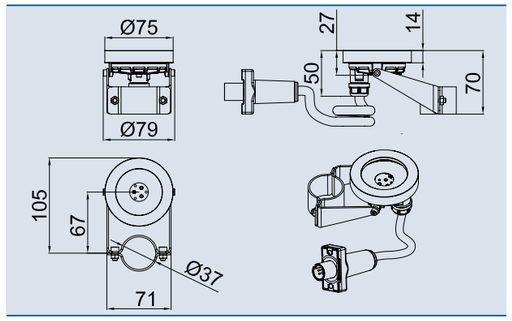

Accessories (must be ordered separately)

Extension cable hybrid / 3.0 m (see page 196)	50728
Extension cable hybrid / 7.5 m (see page 196)	56403
Hybrid connection box (see page 197)	56404
Underwater LED Driver (see page 198)	50720
Connecting cable DMX /01 (see page 194)	**Order no.**
Connecting cable DMX / 1.0 m /01	12368
Connecting cable DMX / 1.5 m /01	49628
Connecting cable DMX / 3.0 m /01	12369
Connecting cable DMX / 5.0 m /01	12371
Connecting cable DMX / 10.0 m /01	12372
Connecting cable DMX / 20.0 m /01	12373
End resistant for BUS-system DMX/01	12007
Connecting cable 24 V DC /01 (see page 192)	**Order no.**
Connecting cable 24 V DC / 1.0 m /01	12762
Connecting cable 24 V DC / 1.5 m /01	49629
Connecting cable 24 V DC / 3.0 m /01	12552
Connecting cable 24 V DC / 7.5 m /01	12553
Connecting cable 24 V DC / 15.0 m /01	11720
PowerBox 24 V DC /01 (see page 192)	50493
Underwater power supply 250 / 24 V /01 (see page 202)	50733
WECS II 512 /DMX/02 (see page 206)	56491
WECS II 1024 /DMX/02 (see page 206)	56492
WECS II 2048 /DMX/02 (see page 212)	56507

DMX-Channel	Function
Channel 1	red
Channel 2	green
Channel 3	blue
Channel 4	strobe

ProfiLux LED 110 /DMX/02		
Luminous flux all on	[lm]	213
Luminous flux red	[lm]	64
Luminous flux green	[lm]	114
Luminous flux blue	[lm]	35
Beam angle	[°]	25 (± 2)
Strobe effect	[Hz]	0-25
Energy efficiency class of light fixture		A
Weighted energy consumption per light fixture	[kWh/1000h]	7
Rated voltage	[V/DC]	24
Power consumption	[W]	6
Rated current	[A]	0.26
Dim frequency	[Hz]	2800
Power connection type		Hybrid plug
Cable length	[m]	1
Protection class		IP 68
Dimensions (Ø x H)	[mm]	75 x 70
Material		Stainless steel 1.4404 (AISI 316L)
Weight	[kg]	0.48
Order no.		**56267**

	Fresh Water	Pool Water	Sea Water	220-240 V	400 V	110-120 V	50 Hz	60 Hz	12 V AC	24 V DC	DMX	DMX/ RDM	Plug and Spray
ProfiLux LED 320	●	●	●	○	○	○	○	○	○	●	●	●	●

ProfiLux LED 320 /DMX/02

The ProfiLux RGB LED-light is the new innovative illumination technology from OASE; DMX/RDM cable for higher fountains.

This LED-RGB light comes with high-quality stainless steel housing for fresh-, pool and sea water (definition see on page 260). These LED-light have temperature regulation and overheating protection so that dry installation also possible. They have a lifetime up to 100.000h.*
The basic colours of the LED-RGB-lights are each measured for their brightness. Our OASE LED-Driver (see page 198) ensures equal brightness for all lights in the system, thereby creating a homogeneous colour combination.

ProfiLux LED 320 /DMX/02

Product characteristics at a glance

- Energy efficient LED-RGB-light with mounting bracket and fine adjustment.
- 573 Lumen with a narrow beam angle of 16°, max. 16 Watt
- Temperature controlled high quality LED for an extra-long life of up to 100,000 h.*
- Wet and dry installation – water proof in accordance with IP68
- For fresh water, pool water and sea water
- External electronic in a separate control box / junction box – waterproof connector, easy to connect.
- DMX/RDM-capable in combination with the Underwater LED Driver /DMX/02 (50720)
- Individual measurement of the basic colours of the LED-RGB lights and the use of the Underwater LED Driver /DMX/02 (50720) guarantees equal brightness of all lights in the system and a homogeneous colour combination.
- Galvanic isolation between the DMX and 24 V DC power

*In case of underwater application, an intelligent heat management and quality LED enables a lifetime of up to 100.000 hrs. This claim does not entitle to a guarantee.

Further individual possibilities for these LED light can be found in the LED configurator on our homepage.
www.oase-livingwater.com/en_EN/portal/login/

The vibrant colour show their full wonders when combined with dynamic water effects. The Underwater LED Driver (see on page 198) is required for the DMX/RDM capable use of the ProfiLux LED. Also a RDM-capable controller like the WECS II (WECS II 512, WECS II 1024 and WECS II 2048, see on page 206-212) is necessary. Due to this capability they send information back to the control panel. The ProfiLux LED has one plug with one meter cable to connect with the Underwater LED-Driver. For larger distances the Extension cable hybrid 3,0 m or 7,5 m is used (see on page 196). Up to 4 LEDs can be controlled individually with this external control. The Underwater LED Driver contains two connection boxes for the 24 Volt power supply and DMX/RDM data source. Through this special connection technology, wiring by hand is no longer necessary. Pumps and other consumer loads (e.g. Varionaut) can be connected easily to DMX/RDM of the light. The pluggable Underwater power supply 250 24 V /01 (see on page 202) is required for the plug and spray function on the 24 Volt power supply.

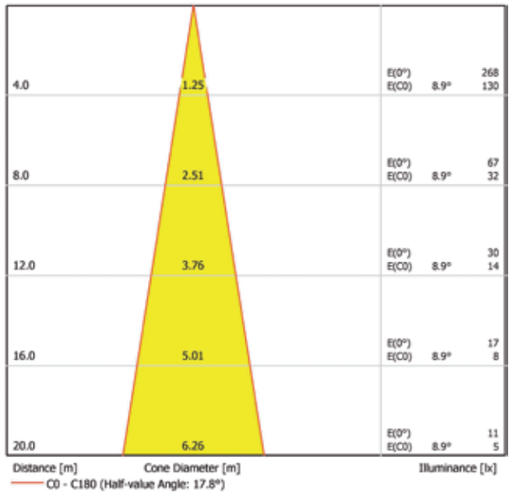

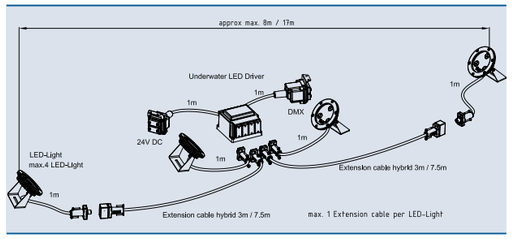

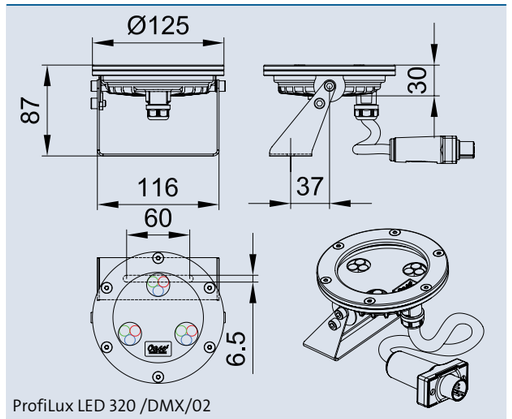

ProfiLux LED 320 /DMX/02

Accessories (must be ordered separately)

Extension cable hybrid / 3.0 m (see page 196)	50728
Extension cable hybrid / 7.5 m (see page 196)	56403
Underwater LED Driver (see page 198)	50720
Lamp Holder (see page 178)	50786
Connecting cable DMX /01 (see page 194)	**Order no.**
Connecting cable DMX / 1.0 m /01	12368
Connecting cable DMX / 1.5 m /01	49628
Connecting cable DMX / 3.0 m /01	12369
Connecting cable DMX / 5.0 m /01	12371
Connecting cable DMX / 10.0 m /01	12372
Connecting cable DMX / 20.0 m /01	12373
End resistant for BUS-system DMX/01	12007
Connecting cable 24 V DC /01 (see page 192)	**Order no.**
Connecting cable 24 V DC / 1.0 m /01	12762
Connecting cable 24 V DC / 1.5 m /01	49629
Connecting cable 24 V DC / 3.0 m /01	12552
Connecting cable 24 V DC / 7.5 m /01	12553
Connecting cable 24 V DC / 15.0 m /01	11720
PowerBox 24 V DC /01 (see page 192)	50493
Underwater power supply 250 / 24 V /01 (see page 202)	50733
WECS II 512 /DMX/02 (see page 206)	56491
WECS II 1024 /DMX/02 (see page 206)	56492
WECS II 2048 /DMX/02 (see page 212)	56507

ProfiLux LED 320 /DMX/02	**58917**
With amber	ProfiLux-II-C-RGBA-16-B-1-S-N
With royal blue	ProfiLux-II-C-RGrB-16-B-1-S-N
With amber and royal blue	ProfiLux-II-C-RGrBA-16-B-1-S-N

ProfiLux LED 320/DMX/02		
Luminous flux all on	[lm]	573
Luminous flux red	[lm]	172
Luminous flux green	[lm]	307
Luminous flux blue	[lm]	94
Beam angle	[°]	16 (± 2)
Energy efficiency class of light fixture		A
Weighted energy consumption per light fixture	[kWh/1000h]	18
Rated voltage	[V/DC]	24
Power consumption	[W]	16
Rated current	[A]	0.7
Dim frequency	[Hz]	500
Power connection type		Hybrid plug
Cable length	[m]	1
Protection class		IP 68
Dimensions (Ø x H)	[mm]	125 x 87
Material		Stainless steel 1.4404 (AISI 316L)
Weight	[kg]	1.20
Order no.		**50717**

	Fresh Water	Pool Water	Sea Water	220-240 V	400 V	110-120 V	50 Hz	60 Hz	12 V AC	24 V DC	DMX	DMX/ RDM	Plug and Spray
ProfiLux LED Spot 1500	●	●	●	○	○	○	○	○	○	●	●	●	●

ProfiLux LED Spot 1500 /DMX/02

The new ProfiLux LED Spot 1500 /DMX/02, with 1345 lumen and a narrow beam angle of 11° for higher fountains, the most powerful RGBW-LED (spot) light.

The LED-spot-light has a high quality stainless steel housing and is suitable for fresh water, pool water and sea water application (for definition see page 260). Equipped with a temperature control and a thermal protection, the LED light can also be installed dry. The lifetime of these lights is up to 100,000 h.*
The Spot has a waterproof hybrid (voltage/data) connector. With the underwater LED Driver /DMX/02 (50720) (not in scope of supply) the ProfiLux LED light can be controlled via DMX.

ProfiLux LED Spot 1500 /DMX/02

The basic colours of the LED-RGBW-lights are measured individually for their brightness. The LED-Driver ensures equal brightness for all lights in the system, thereby creating a homogeneous colour combination.

Product characteristics at a glance

- Energy efficient LED-RGBW-light with mounting bracket and fine adjustment.
- 1263 Lumen with a narrow beam angle of 11°, max. 31.8 Watt
- Temperature controlled high quality LED for an extra-long life of up to 100,000 h.*
- Wet and dry installation – water proof in accordance with IP68
- For fresh water, pool water and sea water
- External electronic in a separate control box / junction box – waterproof connector, easy to connect.
- DMX/RDM-capable in combination with the Underwater LED Driver /DMX/02 (50720)
- Individual measurement of the basic colours of the LED-RGBW lights and the use of the Underwater LED Driver /DMX/02 (50720) guarantees equal brightness of all lights in the system and a homogeneous colour combination.
- Galvanic isolation between the DMX and 24 V DC power
- Stroboscope effect, synchronised via DMX

*In case of underwater application, an intelligent heat management and quality LED enables a lifetime up to 100.000 hrs. This claim does not entitle to a guarantee.

Further individual possibilities for these LED light can be found in the LED configurator on our homepage.
www.oase-livingwater.com/en_EN/portal/login/

The variety of colour compositions reveal their full effect in combination with dynamic water effects.
The Underwater LED Driver /DMX/02 (see page 198) is required for a DMX/RDM-capable application of the ProfiLux LED Spot . In addition a RDM-capable controller like WECS II (WECS II 512, WECS II 1024 or WECS II 2048, see page 206-212) is also needed.
The ProfiLux LED Spot has a hybrid socket connection. The Underwater LED Driver /DMX/02 is connected to the ProfiLux LED Spot with a 3.0 m or a 7.5 m Hybrid-Extension cable (not in scope of supply) (see page 196). Up to 4 LEDs can be individually controlled with this external Underwater LED-Driver. The Underwater LED Driver /DMX/02 is equipped with two connection boxes – one for the power supply with 24 V DC and the other one for a DMX/RDM-data cable. The special connection technology makes a watertight pluggable cabling possible.

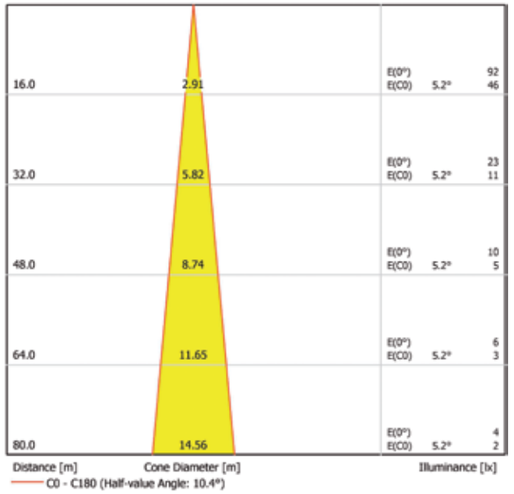

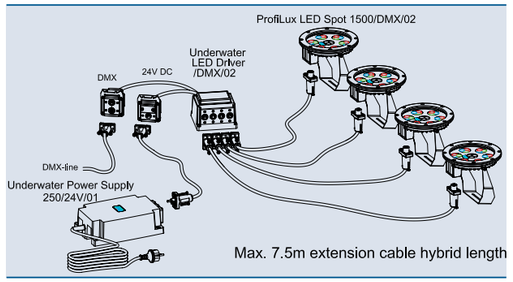

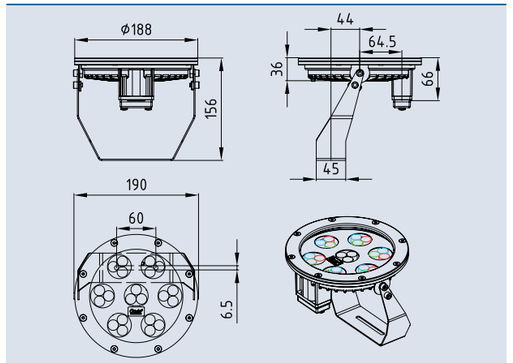

ProfiLux LED Spot 1500 /DMX/02

Accessories (must be ordered separately)

Extension cable hybrid / 3.0 m (see page 196)	50728
Extension cable hybrid / 7.5 m (see page 196)	56403
Underwater LED Driver (see page 198)	50720
Lamp Holder (see page 178)	50786
Connecting cable DMX /01 (see page 194)	**Order no.**
Connecting cable DMX / 1.0 m /01	12368
Connecting cable DMX / 1.5 m /01	49628
Connecting cable DMX / 3.0 m /01	12369
Connecting cable DMX / 5.0 m /01	12371
Connecting cable DMX / 10.0 m /01	12372
Connecting cable DMX / 20.0 m /01	12373
End resistant for BUS-system DMX/01	12007
Connecting cable 24 V DC /01 (see page 192)	**Order no.**
Connecting cable 24 V DC / 1.0 m /01	12762
Connecting cable 24 V DC / 1.5 m /01	49629
Connecting cable 24 V DC / 3.0 m /01	12552
Connecting cable 24 V DC / 7.5 m /01	12553
Connecting cable 24 V DC / 15.0 m /01	11720
PowerBox 24 V DC /01 (see page 192)	50493
Underwater power supply 250 / 24 V /01 (see page 202)	50733
WECS II 512 /DMX/02 (see page 206)	56491
WECS II 1024 /DMX/02 (see page 206)	56492
WECS II 2048 /DMX/02 (see page 212)	56507

ProfiLux LED Spot 1500 /DMX/02	**58917**
With amber	ProfiLux-III-C-RGBWA-11-A-N-S-N
With royal blue	ProfiLux-III-C-RGrB-11-A-N-S-N
With amber and royal blue	ProfiLux-III-C-RGrBWA-11-A-N-S-N

ProfiLux LED Spot 1500 /DMX/02		
Luminous flux all on	[lm]	1263
Luminous flux red	[lm]	284
Luminous flux green	[lm]	509
Luminous flux blue	[lm]	156
Luminous flux white	[lm]	313
Colour temperature LED white	[K]	4000 (± 200)
Colour Rendering Index (CRI)	[%]	80
Beam angle	[°]	11 (± 2)
Strobe effect	[Hz]	0-25
Energy efficiency class of light fixture		A
Weighted energy consumption per light fixture	[kWh/1000h]	35
Rated voltage	[V/DC]	24
Power consumption	[W]	32
Rated current	[A]	1.4
Dim frequency	[Hz]	2800
Power connection type		Hybrid socket
Protection class		IP 68
Dimensions (Ø x H)	[mm]	188 x 156
Material		Stainless steel 1.4404 (AISI 316L)
Weight	[kg]	2.75
Order no.		**56388**

	Fresh Water	Pool Water	Sea Water	220-240 V	400 V	110-120 V	50 Hz	60 Hz	12 V AC	24 V DC	DMX	DMX/ RDM	Plug and Spray
ProfiLux LED Flood 1500	●	●	●	○	○	○	○	○	○	●	●	●	●

ProfiLux LED Flood 1500 /DMX/02

The ProfiLux LED Flood 1500 /DMX/02 is the new and the most powerful RGBW-LED flood light. It has a lumen output of 1345 lumens and a wide beam angle of 31° for wide-area illumination.

The LED-flood-light has a high quality stainless steel housing and is suitable for fresh water, pool water and sea water application (for definition see page 260). Equipped with a temperature control and a thermal protection, the LED light can also be installed dry. The lifetime of these lights is up to 100,000 h.*
The light has a waterproof hybrid (voltage/data) connector. With the underwater LED Driver/ DMX/02 (50720) (not in scope of supply) the ProfiLux LED light can be controlled via DMX.

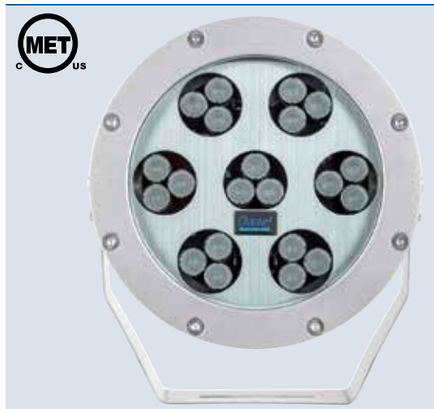

ProfiLux LED Flood 1500 /DMX/02

The basic colours of the LED-RGBW-lights are measured individually for their brightness. The LED-Driver ensures equal brightness for all lights in the system, thereby creating a homogeneous colour combination.

Product characteristics at a glance

- Energy efficient LED-RGBW-light with mounting bracket and fine adjustment.
- 1263 Lumen with a wide beam angle of 31°, max. 31.8 Watt
- Temperature controlled high quality LED for an extra-long life of up to 100,000 h.*
- Wet and dry installation – water proof in accordance with IP68
- For fresh water, pool water and sea water
- External electronic in a separate control box / junction box – waterproof connector, easy to connect.
- DMX/RDM-capable in combination with the Underwater LED Driver /DMX/02 (50720)
- Individual measurement of the basic colours of the LED-RGBW lights and the use of the Underwater LED Driver /DMX/02 (50720) guarantees equal brightness of all lights in the system and a homogeneous colour combination.
- Galvanic isolation between the DMX and 24 V DC power
- Stroboscope effect, synchronised via DMX

*In case of underwater application, an intelligent heat management and quality LED enables a lifetime of up to 100.000 hrs. This claim does not entitle to a guarantee.

Further individual possibilities for these LED light can be found in the LED configurator on our homepage.
www.oase-livingwater.com/en_EN/portal/login/

The variety of colour compositions reveal their full effect in combination with dynamic water effects.
The Underwater LED Driver /DMX/02 (see page 198) is required for a DMX/RDM-capable application of the ProfiLux LED Flood . In addition a RDM-capable controller like WECS II (WECS II 512, WECS II 1024 or WECS II 2048, see page 206-212) is also needed.
The ProfiLux LED Flood has a hybrid socket connection. The Underwater LED Driver /DMX/02 is connected to the ProfiLux LED Spot with a 3.0 m or a 7.5 m Hybrid-Extension cable (not in scope of supply) (see page 196). Up to 4 LEDs can be individually controlled with this external Unterwasser LED-Driver. The Underwater LED Driver / DMX/02 is equipped with two connection boxes – one for the power supply with 24 V DC and the other one for a DMX/RDM-data cable. The special connection technology makes a watertight pluggable cabling possible.

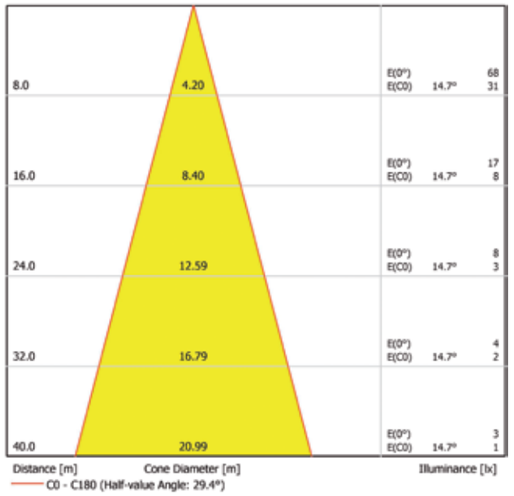

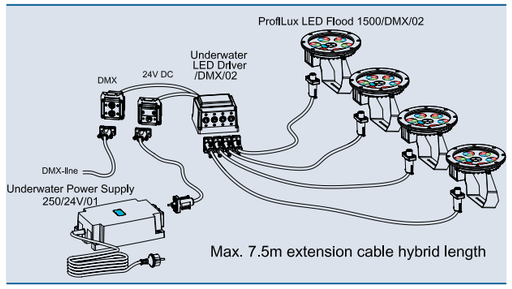

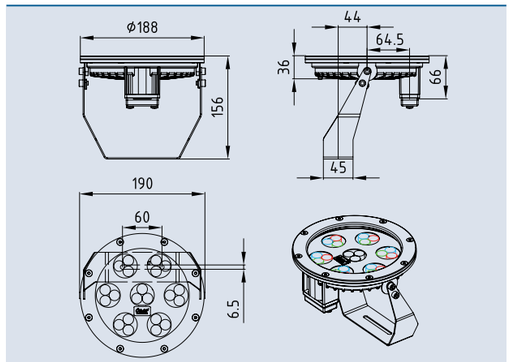

ProfiLux LED Flood 1500 /DMX/02

Accessories (must be ordered separately)

Extension cable hybrid / 3.0 m (see page 196)	50728
Extension cable hybrid / 7.5 m (see page 196)	56403
Underwater LED Driver (see page 198)	50720
Lamp Holder (see page 178)	50786
Connecting cable DMX /01 (see page 194)	**Order no.**
Connecting cable DMX / 1.0 m /01	12368
Connecting cable DMX / 1.5 m /01	49628
Connecting cable DMX / 3.0 m /01	12369
Connecting cable DMX / 5.0 m /01	12371
Connecting cable DMX / 10.0 m /01	12372
Connecting cable DMX / 20.0 m /01	12373
End resistant for BUS-system DMX/01	12007
Connecting cable 24 V DC /01 (see page 192)	**Order no.**
Connecting cable 24 V DC / 1.0 m /01	12762
Connecting cable 24 V DC / 1.5 m /01	49629
Connecting cable 24 V DC / 3.0 m /01	12552
Connecting cable 24 V DC / 7.5 m /01	12553
Connecting cable 24 V DC / 15.0 m /01	11720
PowerBox 24 V DC /01 (see page 192)	50493
Underwater power supply 250 / 24 V /01 (see page 202)	50733
WECS II 512 /DMX/02 (see page 206)	56491
WECS II 1024 /DMX/02 (see page 206)	56492
WECS II 2048 /DMX/02 (see page 212)	56507

ProfiLux LED Flood 1500 /DMX/02	**58917**
With amber	ProfiLux-III-C-RGBWA-31-A-N-S-N
With royal blue	ProfiLux-III-C-RGrBW-31-A-N-S-N
With amber and royal blue	ProfiLux-III-C-RGrBWA-31-A-N-S-N

ProfiLux LED Flood 1500 / DMX / 02		
Luminous flux all on	[lm]	1263
Luminous flux red	[lm]	284
Luminous flux green	[lm]	509
Luminous flux blue	[lm]	156
Luminous flux white	[lm]	313
Colour temperature LED white	[K]	4000 (± 200)
Colour Rendering Index (CRI)	[%]	80
Beam angle	[°]	31 (± 2)
Strobe effect	[Hz]	0-25
Energy efficiency class of light fixture		A
Weighted energy consumption per light fixture	[kWh/1000h]	35
Rated voltage	[V/DC]	24
Power consumption	[W]	32
Rated current	[A]	1.4
Dim frequency	[Hz]	2800
Power connection type		Hybrid socket
Protection class		IP 68
Dimensions (Ø x H)	[mm]	188 x 156
Material		Stainless steel 1.4404 (AISI 316L)
Weight	[kg]	2.75
Order no.		56391

	Fresh Water	Pool Water	Sea Water	220-240 V	400 V	110-120 V	50 Hz	60 Hz	12 V AC	24 V DC	DMX	DMX/ RDM	Plug and Spray
ProfiPlane LED 110	●	●	●	○	○	○	○	○	○	●	●	●	●

ProfiPlane LED 110 /DMX/02

The ProfiPlane LED 110 /DMX/02, with 213 lumen and a beam angle of 25°, is the new, tiny, compact and powerful RGB-LED light for ground installation and wall mounting.

The cover glass is embedded in the stainless steel mounting ring forming a smooth surface. This makes it free from any extra dirt collecting edges. The compact LED-light (Ø = 109 mm) has a high quality stainless steel housing and is suitable for fresh water, pool water and sea water application (for definition see page 260). Equipped with a temperature control and a thermal protection, the LED light can also be installed dry. The lifetime of these lights is up to 100,000 h.*
The RGB-LED light has a 1 m long connecting cable with a hybrid (power/data) connector. The ProfiPlane LED light can be controlled via DMX with the underwater LED Driver/DMX/02 (50720) (not in scope of supply).The basic colours of the LED-RGB-lights are measured individually for their brightness. The LED-Driver ensures equal brightness for all lights in the system, thereby creating a homogeneous colour combination.

ProfiPlane LED 110 /DMX/02

Product characteristics at a glance

- Energy efficient LED-RGB-light with stainless steel frame for wall mounting and ground installation
- Mounting ring and glass together form a plane surface
- 213 Lumen with a beam angle of 25°, max. 6 Watt
- Temperature controlled high quality LED for an extra-long life of up to 100,000 h.*
- Wet and dry installation – water proof in accordance with IP68
- For fresh water, pool water and sea water
- External electronic in a separate control box / junction box – waterproof connector, easy to connect.
- DMX/RDM-capable in combination with the Underwater LED Driver /DMX/02 (50720)
- Individual measurement of the basic colours and the use of the Underwater LED Driver /DMX/02 (50720) guarantees equal brightness of all lights in the system and a homogeneous colour combination.
- Galvanic isolation between the DMX and 24 V DC power
- Stroboscope effect, synchronised via DMX

*In case of underwater application, an intelligent heat management and quality LED enables a lifetime of up to 100.000 hrs. This claim does not entitle to a guarantee.

Further individual possibilities for these LED light can be found in the LED configurator on our homepage.
www.oase-livingwater.com/en_EN/portal/login/

The variety of colour combinations and the stroboscope effect reveal their full effect in combination.
The Underwater LED Driver /DMX/02 (see page 198) is required for a DMX/RDM-capable application of the ProfiPlane LED light (see page 162-165). In addition a RDM-capable controller, like WECS II (WECS II 512, WECS II 1024 or WECS II 2048, see page 206-212), is also needed.
The ProfiPlane-LED light has a 1 m long connecting cable with a hybrid connector for connecting it to the Underwater LED Driver /DMX/02. A 3.0 m or 7.5 m hybrid extension cable per light can be used for extending the connection (see page 196). Up to 4 LEDs can be individually controlled with this external Underwater LED-Driver. The Underwater LED Driver /DMX/02 is equipped with two connection boxes – one for the power supply with 24 V DC and the other one for a DMX/RDM-data cable. The special connection technology makes a watertight pluggable cabling possible. The use of the hybrid connection box can lead to an economic advantage of the system. The lights which are connected to the hybrid box always have the same colour. (see system diagram.)

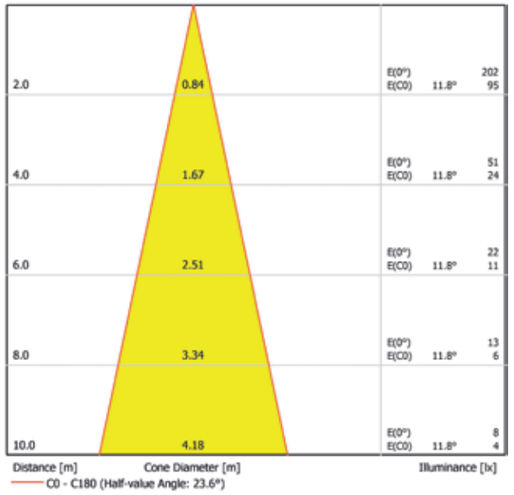

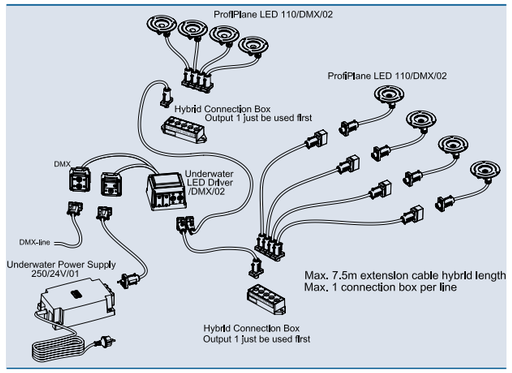

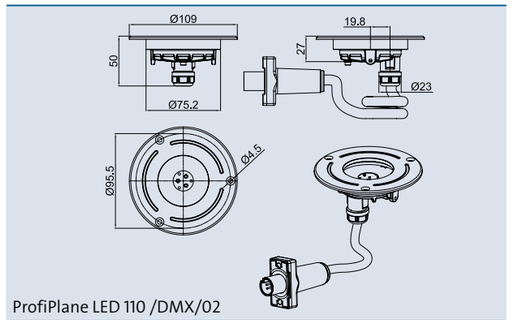

ProfiPlane LED 110 /DMX/02

Accessories (must be ordered separately)

Extension cable hybrid / 3.0 m (see page 196)	50728
Extension cable hybrid / 7.5 m (see page 196)	56403
Hybrid connection box (see page 197)	56404
Underwater LED Driver (see page 198)	50720
Connecting cable DMX /01 (see page 194)	**Order no.**
Connecting cable DMX / 1.0 m /01	12368
Connecting cable DMX / 1.5 m /01	49628
Connecting cable DMX / 3.0 m /01	12369
Connecting cable DMX / 5.0 m /01	12371
Connecting cable DMX / 10.0 m /01	12372
Connecting cable DMX / 20.0 m /01	12373
End resistant for BUS-system DMX/01	12007
Connecting cable 24 V DC /01 (see page 192)	**Order no.**
Connecting cable 24 V DC / 1.0 m /01	12762
Connecting cable 24 V DC / 1.5 m /01	49629
Connecting cable 24 V DC / 3.0 m /01	12552
Connecting cable 24 V DC / 7.5 m /01	12553
Connecting cable 24 V DC / 15.0 m /01	11720
PowerBox 24 V DC /01 (see page 192)	50493
Underwater power supply 250 / 24 V /01 (see page 202)	50733
WECS II 512 /DMX/02 (see page 206)	56491
WECS II 1024 /DMX/02 (see page 206)	56492
WECS II 2048 /DMX/02 (see page 212)	56507

DMX-Channel	Function
Channel 1	red
Channel 2	green
Channel 3	blue
Channel 4	strobe

ProfiPlane LED 110 /DMX/02		
Luminous flux all on	[lm]	213
Luminous flux red	[lm]	64
Luminous flux green	[lm]	114
Luminous flux blue	[lm]	35
Beam angle	[°]	25 (± 2)
Strobe effect	[Hz]	0-25
Energy efficiency class of light fixture		A
Weighted energy consumption per light fixture	[kWh/1000h]	7
Rated voltage	[V/DC]	24
Power consumption	[W]	6
Rated current	[A]	0.26
Dim frequency	[Hz]	2800
Power connection type		Hybrid plug
Cable length	[m]	1
Protection class		IP 68
Static load max.	[t]	1.5
Dimensions (Ø x H)	[mm]	109 x 50
Material		Stainless steel 1.4404 (AISI 316L)
Weight	[kg]	0.61
Order no.		56298

	Fresh Water	Pool Water	Sea Water	220-240 V	400 V	110-120 V	50 Hz	60 Hz	12 V AC	24 V DC	DMX	DMX/ RDM	Plug and Spray
ProfiPlane LED 320	●	●	●	○	○	○	○	○	○	●	●	●	●

PROFIPLANE LED 320 /DMX/02

The ProfiPlane is developed for in-ground installation. These LED-lights can be built into practically any natural stone or paving. This makes them ideal for use in wet or dry fountain installations.

Nozzles can be integrated in the middle of the LED spotlights to illuminate the fountains. Thus attractive symmetric illumination with continuously changing colour nuances is produced. The new generation of LED-RGB light comes with highquality stainless steel housing for fresh-, pool- and sea water (definition see on page 260). These LED-light have temperature regulation and overheating protection so that dry installation is also possible. They have a lifetime up to 100,000 h.* The basic colours of the LED-RGB-lights are each measured for their brightness. Our OASE LED-Driver (see page 198) ensures equal brightness for all lights in the system, thereby creating a homogeneous colour combination.

ProfiPlane LED 320/DMX/02

Product characteristics at a glance

- Energy efficient LED-RGB-light with a center hole D = 22 mm
- Walk-on-able
- Nozzle lamp locking
- 573 Lumen with a narrow beam angle of 16°, max. 16 Watt
- Temperature controlled high quality LED for an extra-long life of up to 100,000 h.*
- Wet and dry installation – water proof in accordance with IP68
- For fresh water, pool water and sea water
- External electronic in a separate control box / junction box – waterproof connector, easy to connect.
- DMX/RDM-capable in combination with the Underwater LED Driver /DMX/02 (50720)
- Individual measurement of the basic colours of the LED-RGB lights and the use of the Underwater LED Driver /DMX/02 (50720) guarantees equal brightness of all lights in the system and a homogeneous colour combination.
- Galvanic isolation between the DMX and 24 V DC power

*In case of underwater application, an intelligent heat management and quality LED enables a lifetime of up to 100.000 hrs. This claim does not entitle to a guarantee.

Further individual possibilities for these LED light can be found in the LED configurator on our homepage.
www.oase-livingwater.com/en_EN/portal/login/

The Underwater LED Driver (see on page 198) is required for the DMX/RDM capable use of the ProfiPlane LED. Also a RDM-capable controller like the WECS II (WECS II 512, WECS II 1024 and WECS II 2048, see on page 206-212) is necessary. Due to this capability they send information back to the control panel. The ProfiPlane LED has one plug with one meter cable to connect with the Underwater LED-Driver. For larger distances the Extension cable hybrid 3.0 m or 7.5 m is used (see on page 196). Up to 4 LEDs can be controlled individually with this external control. The Underwater LED Driver contains two connection boxes for the 24 Volt power supply and DMX/RDM data source. Through this special connection technology, wiring by hand is no longer necessary. Pumps and other consumer loads (e.g. Varionaut) can be connected easily to DMX/RDM of the light. The pluggable Underwater power supply 250 24 V /01 (see on page 202) is required for the plug and spray function on the 24 Volt power supply.

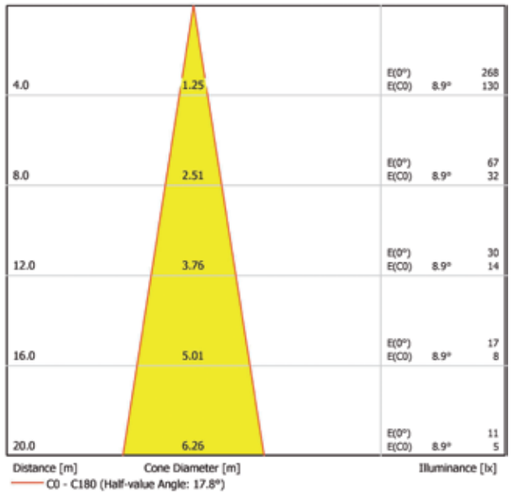

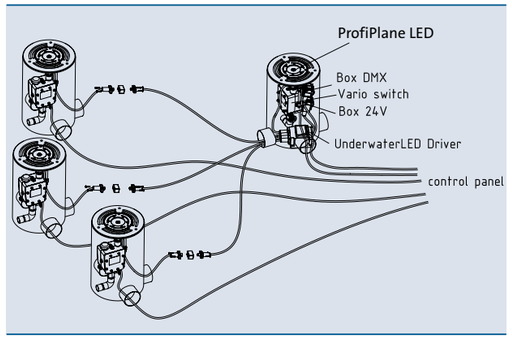

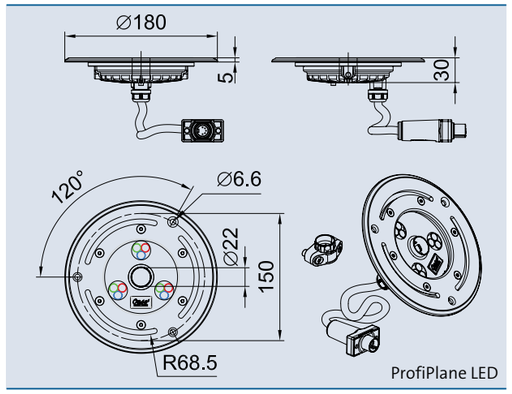

Accessories (must be ordered separately)

Recommended Nozzles	Order no.
Comet 10 - 14 Silver (see page 66)	50723
Comet 10 - 12 T (see page 68)	50968
Comet 10 - 14 T (see page 68)	50969
Extension cable hybrid / 3.0 m (see page 196)	50728
Extension cable hybrid / 7.5 m (see page 196)	56403
Underwater LED Driver (see page 198)	50720
Connecting cable DMX /01 (see page 194)	**Order no.**
Connecting cable DMX / 1.0 m /01	12368
Connecting cable DMX / 1.5 m /01	49628
Connecting cable DMX / 3.0 m /01	12369
Connecting cable DMX / 5.0 m /01	12371
Connecting cable DMX / 10.0 m /01	12372
Connecting cable DMX / 20.0 m /01	12373
End resistant for BUS-system DMX/01	12007
Connecting cable 24 V DC /01 (see page 192)	**Order no.**
Connecting cable 24 V DC / 1.0 m /01	12762
Connecting cable 24 V DC / 1.5 m /01	49629
Connecting cable 24 V DC / 3.0 m /01	12552
Connecting cable 24 V DC / 7.5 m /01	12553
Connecting cable 24 V DC / 15.0 m /01	11720
PowerBox 24 V DC /01 (see page 192)	50493
Underwater power supply 250 / 24 V /01 (see page 202)	50733
WECS II 512 /DMX/02 (see page 206)	56491
WECS II 1024 /DMX/02 (see page 206)	56492
WECS II 2048 /DMX/02 (see page 212)	56507

ProfiPlane LED 320 /DMX/02	58917
With amber	ProfiPlaneNozzle-II-C-RGBA-16-B-1-S-N
With amber and royal blue	ProfiPlaneNozzle-II-C-RGrB-16-B-1-S-N
With royal blue	ProfiPlaneNozzle-II-C-RGrBA-16-B-1-S-N

ProfiPlane LED 320/DMX/02		
Luminous flux all on	[lm]	573
Luminous flux red	[lm]	172
Luminous flux green	[lm]	307
Luminous flux blue	[lm]	94
Beam angle	[°]	16 (± 2)
Energy efficiency class of light fixture		A
Weighted energy consumption per light fixture	[kWh/1000h]	18
Rated voltage	[V/DC]	24
Power consumption	[W]	16
Rated current	[A]	0.7
Dim frequency	[Hz]	500
Power connection type		Hybrid plug
Cable length	[m]	1
Protection class		IP 68
Static load max.	[t]	1.5
Dimensions (Ø x H)	[mm]	188 x 30
Material		Stainless steel 1.4404 (AISI 316L)
Weight	[kg]	1.50
Order no.		50719

	Fresh Water	Pool Water	Sea Water	220-240 V	400 V	110-120 V	50 Hz	60 Hz	12 V AC	24 V DC	DMX	DMX/ RDM	Plug and Spray
ProfiRing LED 320	●	●	●	○	○	○	○	○	○	●	●	●	●

ProfiRing LED 320 /DMX/02

The ProfiRing is developed specifically to illuminate fountains. Nozzles can be integrated in the middle of the LED light. Thus attractive symmetric illumination with continuously changing colour nuances is produced.

The ProfiRing LED is mainly used in the pool directly under the water surface. These LED-lights have temperature regulation and overheating protection so that dry installation is also possible. The new generation of LED-RGB light comes with highquality stainless steel housing for fresh-, pool- and sea water (definition see on page 260). They have a lifetime up to 100,000 h.* The basic colours of the LED-RGB-lights are each measured for their brightness. Our OASE LED-Driver (see page 198) ensures equal brightness for all lights in the system, thereby creating a homogeneous colour combination.

ProfiRing LED 320 /DMX/02

Product characteristics at a glance

- Energy efficient LED-RGB-light with a center hole D = 22 mm
- Nozzle lamp locking
- 573 Lumen with a narrow beam angle of 16°, max. 16 Watt
- Temperature controlled high quality LED for an extra-long life of up to 100,000 h.*
- Wet and dry installation – water proof in accordance with IP68
- For fresh water, pool water and sea water
- External electronic in a separate control box / junction box – waterproof connector, easy to connect.
- DMX/RDM-capable in combination with the Underwater LED Driver /DMX/02 (50720)
- Individual measurement of the basic colours of the LED-RGB lights and the use of the Underwater LED Driver /DMX/02 (50720) guarantees equal brightness of all lights in the system and a homogeneous colour combination.
- Galvanic isolation between the DMX and 24 V DC power

*In case of underwater application, an intelligent heat management and quality LED enables a lifetime of up to 100.000 hrs. This claim does not entitle to a guarantee.

Further individual possibilities for these LED light can be found in the LED configurator on our homepage.
www.oase-livingwater.com/en_EN/portal/login/

The Underwater LED Driver (see on page 198) is required for the DMX/RDM capable use of the ProfiRing LED. Also a RDM-capable controller like the WECS II (WECS II 512, WECS II 1024 and WECS II 2048, see on page 206-212) is necessary. Due to this fact they send information back to the control panel. The ProfiRing LED has one plug with one meter cable to connect with the Underwater LED-Driver. For larger distances is designed the Extension cable hybrid 3.0 m or 7.5 m is used (see on page 196). The Underwater LED Driver contains two connection boxes for the 24 Volt power supply and DMX/RDM data source. Through this special connection technology, wiring by hand is no longer necessary. Pumps and other consumer loads (e.g. Varionaut) can be connected easily to DMX/RDM of the light. The pluggable Underwater power supply 250 24 V /01 (see on page 202) is required for the plug and spray function on the 24 Volt power supply.

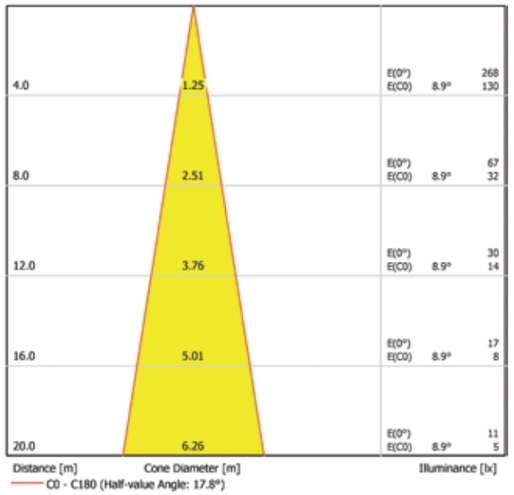

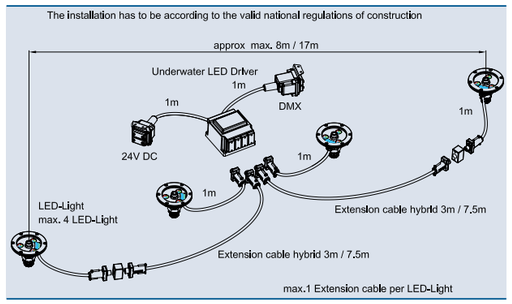

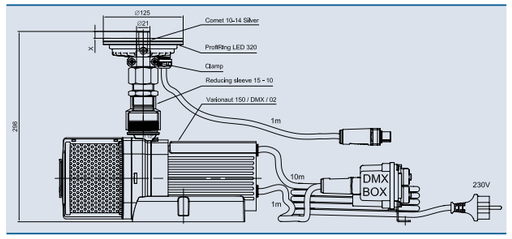

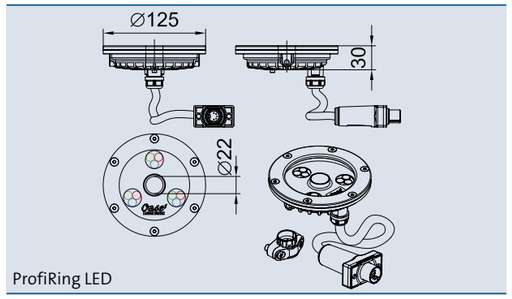

ProfiRing LED

Accessories (must be ordered separately)

Recommended Nozzles	Order no.
Comet 10 - 14 Silver (see page 66)	50723
Comet 10 - 12 T (see page 68)	50968
Comet 10 - 14 T (see page 68)	50969
Extension cable hybrid / 3.0 m (see page 196)	50728
Extension cable hybrid / 7.5 m (see page 196)	56403
Underwater LED Driver (see page 198)	50720
Connecting cable DMX /01 (see page 194)	**Order no.**
Connecting cable DMX / 1.0 m /01	12368
Connecting cable DMX / 1.5 m /01	49628
Connecting cable DMX / 3.0 m /01	12369
Connecting cable DMX / 5.0 m /01	12371
Connecting cable DMX / 10.0 m /01	12372
Connecting cable DMX / 20.0 m /01	12373
End resistant for BUS-system DMX/01	12007
Connecting cable 24 V DC /01 (see page 192)	**Order no.**
Connecting cable 24 V DC / 1.0 m /01	12762
Connecting cable 24 V DC / 1.5 m /01	49629
Connecting cable 24 V DC / 3.0 m /01	12552
Connecting cable 24 V DC / 7.5 m /01	12553
Connecting cable 24 V DC / 15.0 m /01	11720
PowerBox 24 V DC /01 (see page 192)	50493
Underwater power supply 250 / 24 V /01 (see page 202)	50733
WECS II 512 /DMX/02 (see page 206)	56491
WECS II 1024 /DMX/02 (see page 206)	56492
WECS II 2048 /DMX/02 (see page 212)	56507

ProfiRing LED 320 /DMX/02	**58917**
With amber	ProfiRing-II-C-RGBA-16-B-1-S-N
With amber and royal blue	ProfiRing-II-C-RGrB-16-B-1-S-N
With royal blue	ProfiRing-II-C-RGrBA-16-B-1-S-N

ProfiRing LED 320 /DMX/02		
Luminous flux all on	[lm]	573
Luminous flux red	[lm]	172
Luminous flux green	[lm]	307
Luminous flux blue	[lm]	94
Beam angle	[°]	16 (± 2)
Energy efficiency class of light fixture		A
Weighted energy consumption per light fixture	[kWh/1000h]	18
Rated voltage	[V/DC]	24
Power consumption	[W]	16
Rated current	[A]	0.7
Dim frequency	[Hz]	500
Power connection type		Hybrid plug
Cable length	[m]	1
Protection class		IP 68
Dimensions (Ø x H)	[mm]	125 x 30
Material		Stainless steel 1.4404 (AISI 316L)
Weight	[kg]	1.00
Order no.		**50718**

	Fresh Water	Pool Water	Sea Water	220-240 V	400 V	110-120 V	50 Hz	60 Hz	12 V AC	24 V DC	DMX	DMX/ RDM	Plug and Spray
ProfiLux LED 350	●	●	●	○	○	○	○	○	○	●	○	○	●

ProfiLux LED 350 /01

The ProfiLux LED 350 /01 is the new, tiny, compact and powerful white LED light with 340 Lumen and a beam angle of 25°.

This compact neutral white LED-light (Ø = 75.2 mm) has a high quality stainless steel housing and is suitable for fresh water, pool water and sea water application (for definition see page 260). Equipped with a temperature control and a thermal protection, the LED light can also be installed dry. The lifetime of these lights is up to 100,000 h.* The light is supplied with a mounting bracket for ground installation as well as for nozzle tube mounting (designed for socket 10 (51018)).
The LED light has a 4 m long connecting cable with a waterproof 24 V / DC connector.

ProfiLux LED 350 /01

Product characteristics at a glance

- Energy efficient neutral white LED- light with mounting bracket for ground installation and nozzle tube mounting (designed for socket 10 (51018)).
- 340 Lumen with a beam angle of 25°, max. 7.5 Watt
- Colour temperature 4000 K
- 24 V / DC connector with 4 m cable
- Watertight in accordance with IP 68, easy to connect
- Reverse polarity protection
- Temperature controlled high quality LED for an extra-long life of up to 100,000 h.*
- Wet and dry installation
- For fresh water, pool water and sea water
- Compact design (Ø x H) 75 x 27 mm
- DMX/RDM-controllable with Underwater Switch 24 V DC (on/off)

*In case of underwater application, an intelligent heat management and quality LED enables a lifetime of up to 100.000 hrs. This claim does not entitle to a guarantee.

Further individual possibilities for these LED light can be found in the LED configurator on our homepage.
www.oase-livingwater.com/en_EN/portal/login/

The white 24 V / DC LED-light has a 4 m long connecting cable with a 24 V / DC connector for connecting it directly to the Underwater power supply 250 24 V /01 (50733, see page 202; see also system diagram 1).

The white LED can also be individually controlled via DMX. In that case the light should be connected directly to the Underwater Switch 24 V DC /DMX/02 (56411, see page 200).Up to 4 LED's can be controlled individually with this Underwater Switch (see system diagram on page 201). In addition a RDM-capable controller, for eg. WECS II (WECS II 512, WECS II 1024 or WECS II 2048, see page 206-212), is also required.

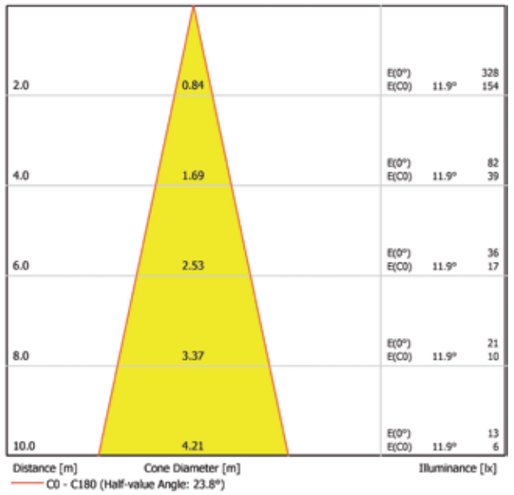

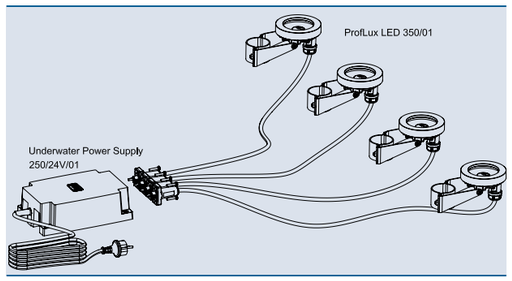

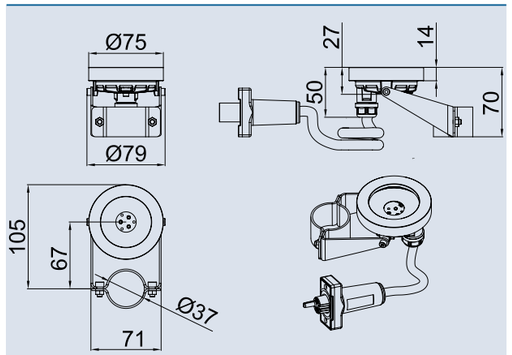

ProfiLux LED 350 /01

Accessories (must be ordered separately)

Underwater Switch 24 V DC /DMX/02 (see page 200)	**56411**
Connecting cable DMX /01 (see page 194)	**Order no.**
Connecting cable DMX / 1.0 m /01	12368
Connecting cable DMX / 1.5 m /01	49628
Connecting cable DMX / 3.0 m /01	12369
Connecting cable DMX / 5.0 m /01	12371
Connecting cable DMX / 10.0 m /01	12372
Connecting cable DMX / 20.0 m /01	12373
End resistant for BUS-system DMX/01	12007
Connecting cable 24 V DC /01 (see page 192)	**Order no.**
Connecting cable 24 V DC / 1.0 m /01	12762
Connecting cable 24 V DC / 1.5 m /01	49629
Connecting cable 24 V DC / 3.0 m /01	12552
Connecting cable 24 V DC / 7.5 m /01	12553
Connecting cable 24 V DC / 15.0 m /01	11720
PowerBox 24 V DC /01 (see page 192)	**50493**
Power connection box 24 V (see page 197)	**47930**
Underwater power supply 250 / 24 V /01 (see page 202)	**50733**
WECS II 512 /DMX/02 (see page 206)	**56491**
WECS II 1024 /DMX/02 (see page 206)	**56492**
WECS II 2048 /DMX/02 (see page 212)	**56507**

ProfiLux LED 350 /01		
Luminous flux white	[lm]	340
Colour temperature LED white	[K]	4000 (± 200)
Colour Rendering Index (CRI)	[%]	80
Beam angle	[°]	25 (± 2)
Energy efficiency class of light fixture		A
Weighted energy consumption per light fixture	[kWh/1000h]	9
Rated voltage	[V/DC]	24
Power consumption	[W]	7.5
Rated current	[A]	0.31
Dim frequency	[Hz]	2800
Power connection type		24 V DC plug
Cable length	[m]	4
Protection class		IP 68
Dimensions (Ø x H)	[mm]	75 x 70
Material		Stainless steel 1.4404 (AISI 316L)
Weight	[kg]	0.61
Order no.		56331

	Fresh Water	Pool Water	Sea Water	220-240 V	400 V	110-120 V	50 Hz	60 Hz	12 V AC	24 V DC	DMX	DMX/ RDM	Plug and Spray
ProfiLux LED 1100	●	●	●	○	○	○	○	○	○	●	○	○	●

ProfiLux LED 1100 /01

The ProfiLux LED 1100 /01, with 918 lumen and a beam angle of 11° is the new, compact and powerful light.

The compact neutral white LED-light (Ø x H) 125 x 32 mm has a high quality stainless steel housing and is suitable for fresh water, pool water and sea water application (for definition see page 260). Equipped with a temperature control and a thermal protection, the LED light can also be installed dry. The lifetime of these lights is up to 100,000 h.*

ProfiLux LED 1100 /01

The light is supplied with a bracket with special fine adjustment. The LED light has a 4 m long connecting cable with a watertight 24 V / DC connector.

Product characteristics at a glance

- Energy efficient neutral white LED-light with bracket and fine adjustment.
- 918 Lumen with a beam angle of 11°, max. 23 Watt
- Colour Temperature 4000 K
- 24 V / DC connector with 4 m cable
- Watertight in accordance with IP 68, easy to connect
- Reverse polarity protection
- Temperature controlled high quality LED for an extra-long life of up to 100,000 h.*
- Wet and dry installation
- For fresh-, pool- and sea water
- Compact design ((Ø x H) 125 x 32 [mm]
- DMX/RDM-controllable with Underwater Switch 24 V DC (on/off)

*In case of underwater application, an intelligent heat management and quality LED enables a lifetime of up to 100.000 hrs. This claim does not entitle to a guarantee.

Further individual possibilities for these LED light can be found in the LED configurator on our homepage.
www.oase-livingwater.com/en_EN/portal/login/

The white 24 V / DC LED-light has a 4 m long connecting cable with a 24 V / DC connector for connecting it directly to the Underwater power supply 250 24 V /01 (50733, see page 202; see also system diagram 1).

The white LED can also be individually controlled via DMX. In that case the light should be connected directly to the Underwater Switch 24 V DC /DMX/02 (56411, see page 200). Up to 4 LED's can be controlled individually with this Underwater Switch (see system diagram 2). In addition a RDM-capable controller, for eg. WECS II (WECS II 512, WECS II 1024 or WECS II 2048, see page 206-212), is also required.

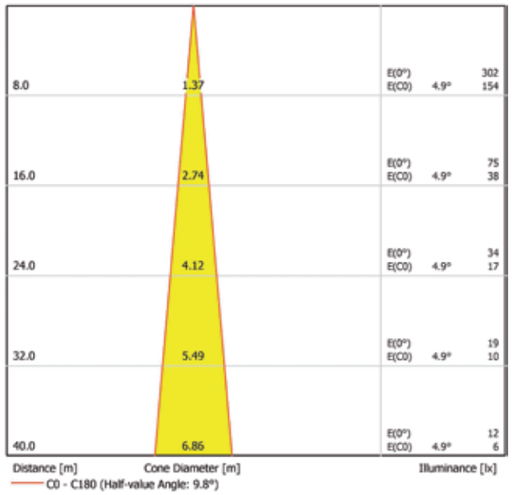

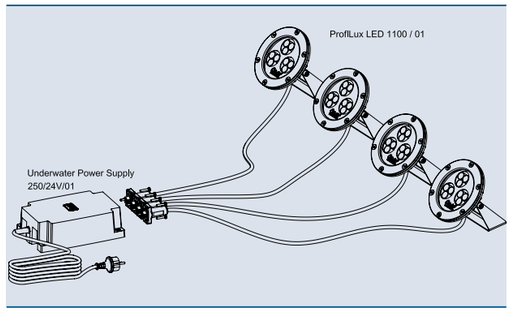

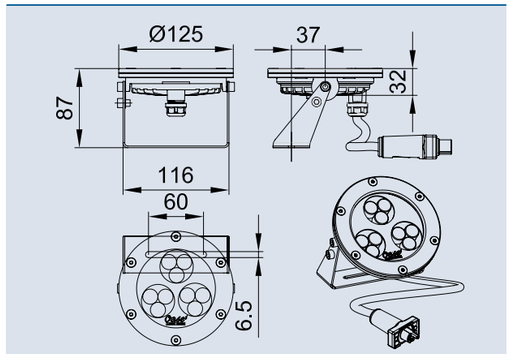

ProfiLux LED 1100 /01

Accessories (must be ordered separately)

Lamp Holder (see page 178)	50786
Underwater Switch 24 V DC /DMX/02 (see page 200)	56411
Connecting cable DMX /01 (see page 194)	**Order no.**
Connecting cable DMX / 1.0 m /01	12368
Connecting cable DMX / 1.5 m /01	49628
Connecting cable DMX / 3.0 m /01	12369
Connecting cable DMX / 5.0 m /01	12371
Connecting cable DMX / 10.0 m /01	12372
Connecting cable DMX / 20.0 m /01	12373
End resistant for BUS-system DMX/01	12007
Connecting cable 24 V DC /01 (see page 192)	**Order no.**
Connecting cable 24 V DC / 1.0 m /01	12762
Connecting cable 24 V DC / 1.5 m /01	49629
Connecting cable 24 V DC / 3.0 m /01	12552
Connecting cable 24 V DC / 7.5 m /01	12553
Connecting cable 24 V DC / 15.0 m /01	11720
PowerBox 24 V DC /01 (see page 192)	50493
Underwater power supply 250 / 24 V /01 (see page 202)	50733
WECS II 512 /DMX/02 (see page 206)	56491
WECS II 1024 /DMX/02 (see page 206)	56492
WECS II 2048 /DMX/02 (see page 212)	56507

ProfiLux LED 1100 / 01		
Luminous flux white	[lm]	918
Colour temperature LED white	[K]	4000 (± 200)
Colour Rendering Index (CRI)	[%]	80
Beam angle	[°]	11 (± 2)
Energy efficiency class of light fixture		A
Weighted energy consumption per light fixture	[kWh/1000h]	26
Rated voltage	[V/DC]	24
Power consumption	[W]	23
Rated current	[A]	0.95
Dim frequency	[Hz]	2800
Power connection type		24 V DC plug
Cable length	[m]	4
Protection class		IP 68
Dimensions (Ø x H)	[mm]	125 x 87
Material		Stainless steel 1.4404 (AISI 316L)
Weight	[kg]	1.20
Order no.		51296

	Fresh Water	Pool Water	Sea Water	220-240 V	400 V	110-120 V	50 Hz	60 Hz	12 V AC	24 V DC	DMX	DMX/ RDM	Plug and Spray
ProfiLux LED Spot 2200	●	●	●	○	○	○	○	○	○	●	○	○	●

ProfiLux LED Spot 2200 /01

The new ProfiLux LED Spot 2200 /01, with 2683 Lumen and a narrow beam angle of 11° for higher fountains, is the most powerful white LED light.

The LED-spot-light has a high quality stainless steel housing and is suitable for fresh water, pool water and sea water application (for definition see page 260). Equipped with a temperature control and a thermal protection, this neutral white LED light is also suitable for dry installation. The lifetime is up to 100,000 h.*
The Spot comes with a waterproof 24 V / DC connector.

ProfiLux LED Spot 2200 /01

Product characteristics at a glance

- Energy efficient neutral white LED- light with mounting bracket and fine adjustment.
- 2683 Lumen with a beam angle of 11°, max. 55 Watt
- Colour temperature 4000 K
- 24 V / DC (plug-in) connector without cable
- Watertight in accordance with IP 68, easy to connect
- Reverse polarity protection
- Temperature controlled high quality LED for an extra-long life of up to 100,000 h.*
- Wet and dry installation
- For fresh water, pool water and sea water
- Compact design (Ø x H) 188 x 36 mm
- DMX/RDM-controllable with Underwater Switch 24 V DC (on/off)

*In case of underwater application, an intelligent heat management and quality LED enables a lifetime of up to 100.000 hrs. This claim does not entitle to a guarantee.

Further individual possibilities for these LED light can be found in the LED configurator on our homepage.
www.oase-livingwater.com/en_EN/portal/login/

The ProfiLux LED Spot has a watertight 24 V / DC socket connector for connecting it to the Underwater Power supply 250 24 V /01 (50733, see page 202) with a 1.0 m; 3.0 m; 7.5 m or 15 m connecting cable (see page 192; see also system diagram 1).

The white LED can also be individually controlled via DMX. In that case the light should be connected to the Underwater Switch 24 V DC /DMX/02 (56411, see page 200).Up to 4 LED's can be controlled individually with this Underwater Switch (see system diagram 2). In addition a RDM-capable controller, for eg. WECS II (WECS II 512, WECS II 1024 or WECS II 2048, see page 206-212), is also required.

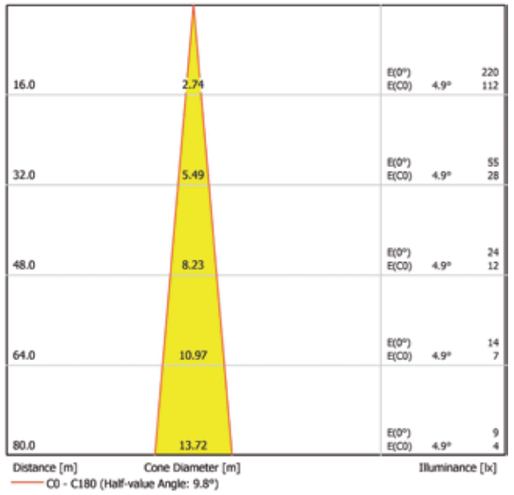

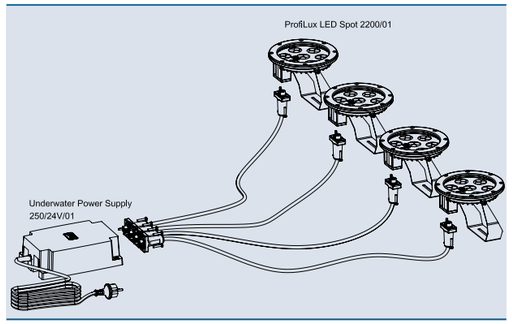

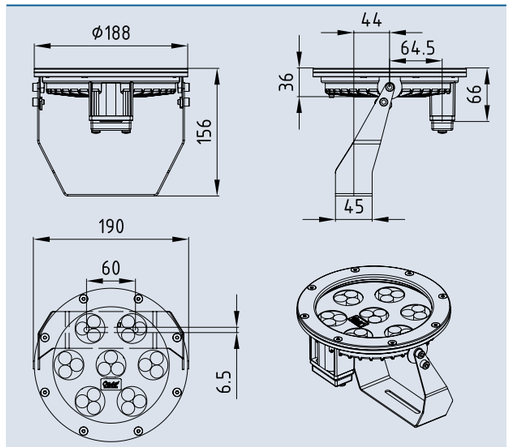

ProfiLux LED Spot 2200 /01

Accessories (must be ordered separately)

Lamp Holder (see page 178)	50786
Underwater Switch 24 V DC /DMX/02 (see page 200)	56411
Connecting cable DMX /01 (see page 194)	**Order no.**
Connecting cable DMX / 1.0 m /01	12368
Connecting cable DMX / 1.5 m /01	49628
Connecting cable DMX / 3.0 m /01	12369
Connecting cable DMX / 5.0 m /01	12371
Connecting cable DMX / 10.0 m /01	12372
Connecting cable DMX / 20.0 m /01	12373
End resistant for BUS-system DMX/01	12007
Connecting cable 24 V DC /01 (see page 192)	**Order no.**
Connecting cable 24 V DC / 1.0 m /01	12762
Connecting cable 24 V DC / 1.5 m /01	49629
Connecting cable 24 V DC / 3.0 m /01	12552
Connecting cable 24 V DC / 7.5 m /01	12553
Connecting cable 24 V DC / 15.0 m /01	11720
PowerBox 24 V DC /01 (see page 192)	50493
Underwater power supply 250 / 24 V /01 (see page 202)	50733
WECS II 512 /DMX/02 (see page 206)	56491
WECS II 1024 /DMX/02 (see page 206)	56492
WECS II 2048 /DMX/02 (see page 212)	56507

ProfiLux LED Spot 2200 /01		
Luminous flux white	[lm]	2683
Colour temperature LED white	[K]	4000 (± 200)
Colour Rendering Index (CRI)	[%]	80
Beam angle	[°]	11 (± 2)
Energy efficiency class of light fixture		A
Weighted energy consumption per light fixture	[kWh/1000h]	61
Rated voltage	[V/DC]	24
Power consumption	[W]	55
Rated current	[A]	2.3
Dim frequency	[Hz]	2800
Power connection type		24 V DC Socket
Protection class		IP 68
Dimensions (Ø x H)	[mm]	188 x 156
Material		Stainless steel 1.4404 (AISI 316 L)
Weight	[kg]	2.75
Order no.		56401

	Fresh Water	Pool Water	Sea Water	220-240 V	400 V	110-120 V	50 Hz	60 Hz	12 V AC	24 V DC	DMX	DMX/ RDM	Plug and Spray
ProfiLux LED Flood 2200	●	●	●	○	○	○	○	○	○	●	○	○	●

ProfiLux LED Flood 2200 /01

The ProfiLux LED Flood 2200 /01 is the new most powerful white LED light with 2683 lumen and a wide beam angle of 31° for wide area illumination.

The LED-flood-light has a high quality stainless steel housing and is suitable for fresh water, pool water and sea water application (for definition see page 260). Equipped with a temperature control and a thermal protection, this neutral white LED light is also suitable for dry installation. The lifetime of these lights is up to 100,000 h.* This light comes with a watertight 24 V / DC connector.

ProfiLux LED Flood 2200 /01

Product characteristics at a glance

- Energy efficient neutral white LED-light with mounting bracket and fine adjustment.
- 2683 Lumen with a beam angle of 31°, max. 55 Watt
- Colour temperature 4000 K
- 24 V / DC connector without cable
- Watertight in accordance with IP 68, easy to connect
- Reverse polarity protection
- Temperature controlled high quality LED for an extra-long life of up to 100,000 h.*
- Wet and dry installation
- For fresh water, pool water and sea water
- Compact design (Ø x H) 188 x 36 mm
- DMX/RDM-controllable with Underwater Switch 24 V DC (on/off)

*In case of underwater application, an intelligent heat management and quality LED enables a lifetime of up to 100.000 hrs. This claim does not entitle to a guarantee.

Further individual possibilities for these LED light can be found in the LED configurator on our homepage.
www.oase-livingwater.com/en_EN/portal/login/

The ProfiLux LED Flood light has a watertight 24 V / DC socket connector for connecting it to the Underwater Power supply 250 24 V /01 (50733, see page 202) with a 1.0 m; 3.0 m; 7.5 m or 15 m connecting cable (see page 192; see also system diagram 1).

The white LED can also be individually controlled via DMX. In that case the light should be connected to the Underwater Switch 24 V DC /DMX/02 (56411, see page 200).Up to 4 LED's can be controlled individually with this Underwater Switch (see system diagram 2). In addition a RDM-capable controller, for eg. WECS II (WECS II 512, WECS II 1024 or WECS II 2048, see page 206-212), is also required.

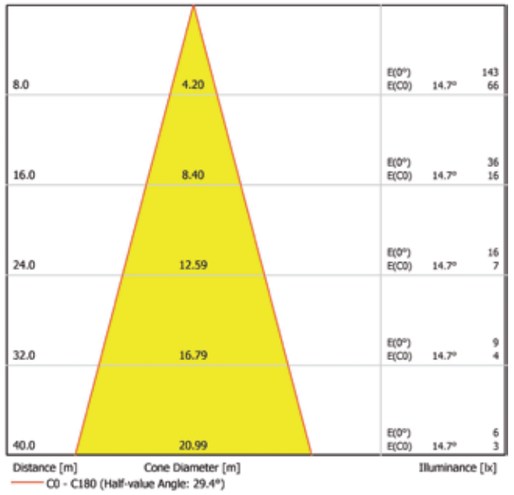

Accessories (must be ordered separately)

Lamp Holder (see page 178)	50786
Underwater Switch 24 V DC /DMX/02 (see page 200)	56411
Connecting cable DMX /01 (see page 194)	**Order no.**
Connecting cable DMX / 1.0 m /01	12368
Connecting cable DMX / 1.5 m /01	49628
Connecting cable DMX / 3.0 m /01	12369
Connecting cable DMX / 5.0 m /01	12371
Connecting cable DMX / 10.0 m /01	12372
Connecting cable DMX / 20.0 m /01	12373
End resistant for BUS-system DMX/01	12007
Connecting cable 24 V DC /01 (see page 192)	**Order no.**
Connecting cable 24 V DC / 1.0 m /01	12762
Connecting cable 24 V DC / 1.5 m /01	49629
Connecting cable 24 V DC / 3.0 m /01	12552
Connecting cable 24 V DC / 7.5 m /01	12553
Connecting cable 24 V DC / 15.0 m /01	11720
PowerBox 24 V DC /01 (see page 192)	50493
Underwater power supply 250 / 24 V /01 (see page 202)	50733
WECS II 512 /DMX/02 (see page 206)	56491
WECS II 1024 /DMX/02 (see page 206)	56492
WECS II 2048 /DMX/02 (see page 212)	56507

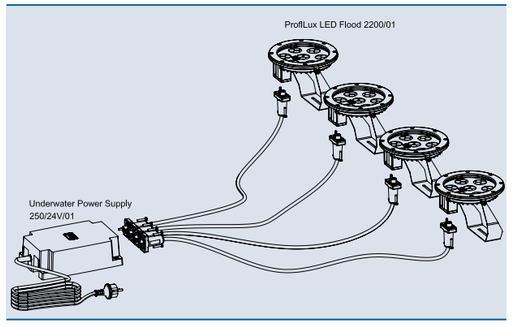

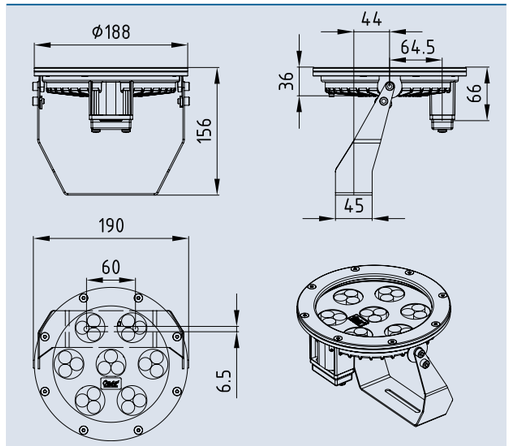

ProfiLux LED Flood 2200 /01

ProfiLux LED Flood 2200 /01		
Luminous flux white	[lm]	2683
Colour temperature LED white	[K]	4000 (± 200)
Colour Rendering Index (CRI)	[%]	80
Beam angle	[°]	31 (± 2)
Energy efficiency class of light fixture		A
Weighted energy consumption per light fixture	[kWh/1000h]	61
Rated voltage	[V/DC]	24
Power consumption	[W]	55
Rated current	[A]	2.3
Dim frequency	[Hz]	2800
Power connection type		24 V DC Socket
Protection class		IP 68
Dimensions (Ø x H)	[mm]	188 x 156
Material		Stainless steel 1.4404 (AISI 316 L)
Weight	[kg]	2.75
Order no.		56402

Customized version

	Fresh Water	Pool Water	Sea Water	220-240 V	400 V	110-120 V	50 Hz	60 Hz	12 V AC	24 V DC	DMX	DMX/ RDM	Plug and Spray
LED Stripe	●	●	●*	○	○	○	○	○	○	●	●	○	○

*Seawater product version on request

LED Stripe

The LED Stripe in RGB or white enables individual accentuation of water surfaces by indirect lighting of wall edges, overflows. They are IP68 waterproof and used underwater.

The LED Stripe enhances the scope of fountain illumination and combination of fountain colours and form of the existing range of LED lights. The special architectural features can be highlighted by the LED-stripes which gives the fountain an individual character. Running lines of homogeneous lights in the pool create magical effects and a variety of patterns.

The extremely versatile and customizable LED Stripe is available in various lengths individual. It can be bent freely in different directions (see sketch below) allowing for increased flexibility in design. The matching profiles which are used to fix the LED Stripes are available in different materials depending on their application. The easy mounting with the pre-fixed profiles allows the LED Stripe to integrate invisibly in the existing pool structure.

Product characteristics at a glance

- **High quality SMD LED chip**
- **Protection Circuit: every LED Protected**
- **Perfectly uniform & evenly distributing light source with invisible light points**
- **IP 68 rated**
- **Continuous length up to 10m illumination**
- **cUL US-listed, CE, TUV and RoHS compliant**
- **Homogeneous illumination**

Customized version

Innovation – made by OASE

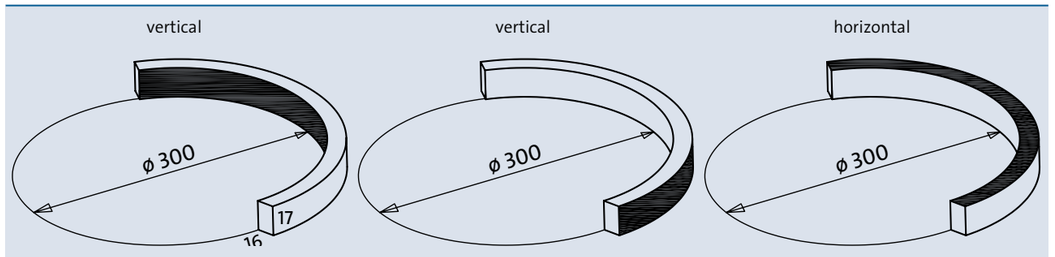

LED Stripe

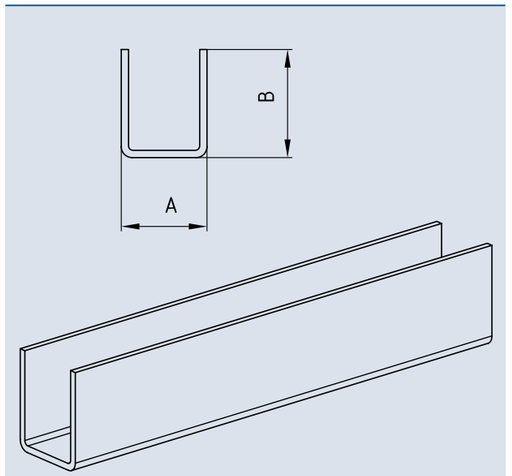

LED Stripe U-Profil – Example

The RGB-LED stripe is connected to a DMX – driver which is supplied with it. Different lighting sequences or entire light shows can be created individually with a DMX controller (WECS II 512, 1024, 2048).

Accessories (must be ordered separately)

WECS II 512 /DMX/02 (see page 206)	56491
WECS II 1024 /DMX/02 (see page 206)	56492
WECS II 2048 /DMX/02 (see page 1212)	56507

LED Stripe	
Order no.	58911

	Fresh Water	Pool Water	Sea Water	220-240 V	400 V	110-120 V	50 Hz	60 Hz	12 V AC	24 V DC	DMX	DMX/ RDM	Plug and Spray
Lamp Holder	●	●	●	○	○	○	○	○	○	○	○	○	○

Lamp Holder

For fast, easy, and secure mounting of up to six spotlights with the associated underwater transformers.

The holders can be mounted on all types of pipes above and below the water surface with an adjustable quick clamp fixture. Thus the spotlights can be symmetrically fixed in place around a nozzle pipe. Thanks to the corrosion-resistant total metal construction and the robust design the spotlight holders are extremely reliable and offer a long service life.

Product characteristics at a glance

- **Lamp Holder compatible with:**
  - **- ProfiLux LED 320 /DMX/02 — 50717**
  - **- ProfiLux LED 1100 /01 — 51296**
  - **- ProfiLux LED Spot 1500 /DMX/02 — 56388**
  - **- ProfiLux LED Flood 1500 /DMX/02 — 56391**
  - **- ProfiLux LED Spot 2200 /01 — 56401**
  - **- ProfiLux LED Flood 2200 /01 — 56402**
- **For Pipes from ½" to 2" (24 mm up to 67 mm)**

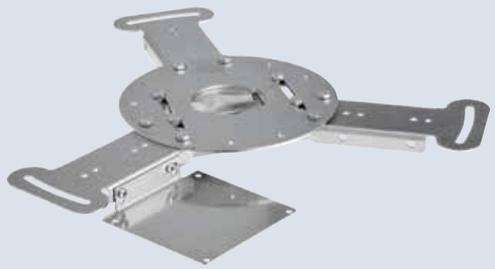

Lamp Holder

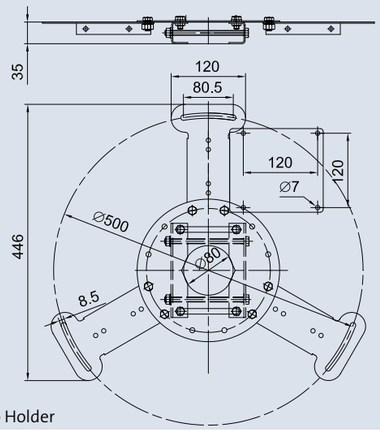

Lamp Holder

Additional lamp holder on request:

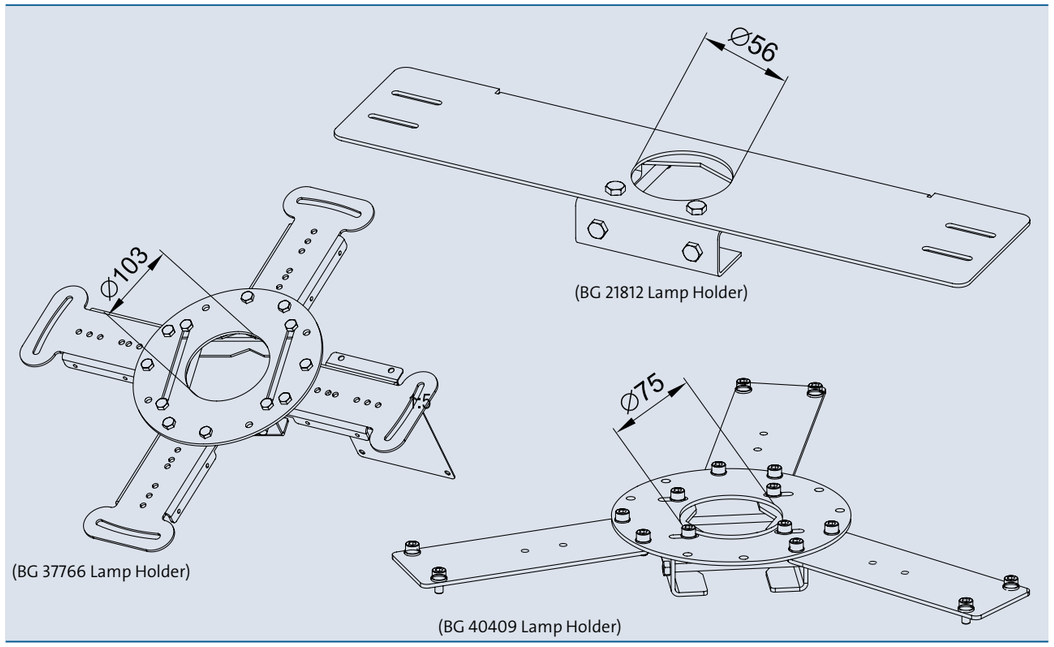

(BG 21812 Lamp Holder)

(BG 37766 Lamp Holder)

(BG 40409 Lamp Holder)

Lamp Holder		
Dimensions (L x W x H)	[mm]	446 x 446 x 37
Material		Stailess steel 1.4571 (AISI 316Ti)
Weight	[kg]	3.4
Order no.		**50786**

	Fresh Water	Pool Water	Sea Water	220-240 V	400 V	110-120 V	50 Hz	60 Hz	12 V AC	24 V DC	DMX	DMX/ RDM	Plug and Spray
LED Modul MDD L 2D /DMX/02	●	●	●	○	○	○	○	○	○	●	●	●	●
LED Modul MDD L 3D /DMX/02	●	●	●	○	○	○	○	○	○	●	●	●	●

LED Modul MDD L 2D /DMX/02
LED Modul MDD L 3D /DMX/02

LED Modul is designed for the Multi Directional Drive (MDD L 2D, MDD L 3D). This Module fits also for the Comet Prec 20 - 20 Silver or FanJet 15 - 8 Silver.

NEW

LED Modul MDD L 2D /DMX/02
LED Modul MDD L 3D /DMX/02

Product characteristics at a glance

- Energy efficient LED-RGB spotlight with holder
- Optimized for use with Multi Directional Drive L 2D/3D
- Opening cross section 41 mm center clamp holder (70977)
- Temperature controlled high class LED
- For illumination of fountains up to approx. 15 m
- External electronic in a separate control/ power box – easy pluggable connection
- Wet and dry installation - waterproof IP 68
- DMX/RDM capable
- Lifetime of up to 100.000 h*
- Incl. 50720 Underwater LED Driver /DMX/02

*In case of underwater application, an intelligent heat management and quality LED enables a lifetime of up to 100.000 hrs. This claim does not entitle to a guarantee.

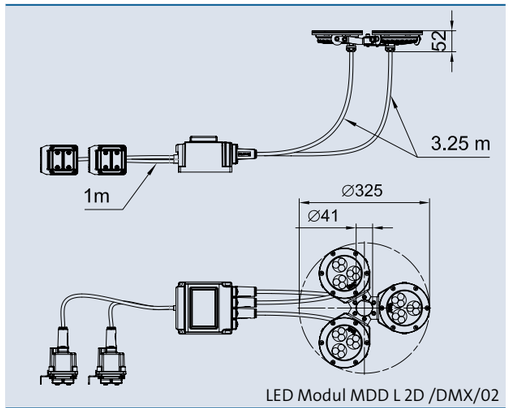

LED Modul MDD L 2D /DMX/02

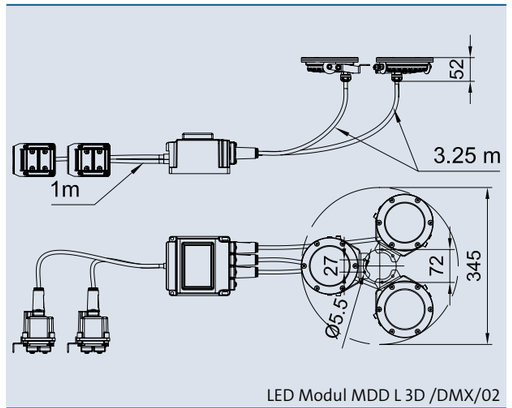

LED Modul MDD L 3D /DMX/02

LED Modul MDD		L 2D/DMX/02	L 3D/DMX/02
Luminous flux all on	[lm]	3 x 573	3 x 573
Luminous flux red	[lm]	3 x 172	3 x 172
Luminous flux green	[lm]	3 x 307	3 x 307
Luminous flux blue	[lm]	3 x 94	3 x 94
Beam angle	[°]	11	31
Strobe effect	[Hz]	25	25
Energy efficiency class of light fixture		A	A
Weighted energy consumption per light fixture	[kWh/1000h]	18	18
Rated voltage	[V/DC]	24	24
Power consumption	[W]	48	48
Rated current	[A]	2.1	2.1
Dim frequency	[Hz]	2.8 kHz	2.8 kHz
Power connection		1.00 m cable with box	1.00 m cable with box
DMX connection		1.00 m cable with box	1.00 m cable with box
Protection class		IP 68	IP 68
Dimensions (Ø x H)	[mm]	325 x 44	325 x 44
Material		Stainless steel 1.4404 (AISI 316 L)	Stainless steel 1.4404 (AISI 316 L)
Weight	[kg]	3.5	3.5
Order no.		70977	70975

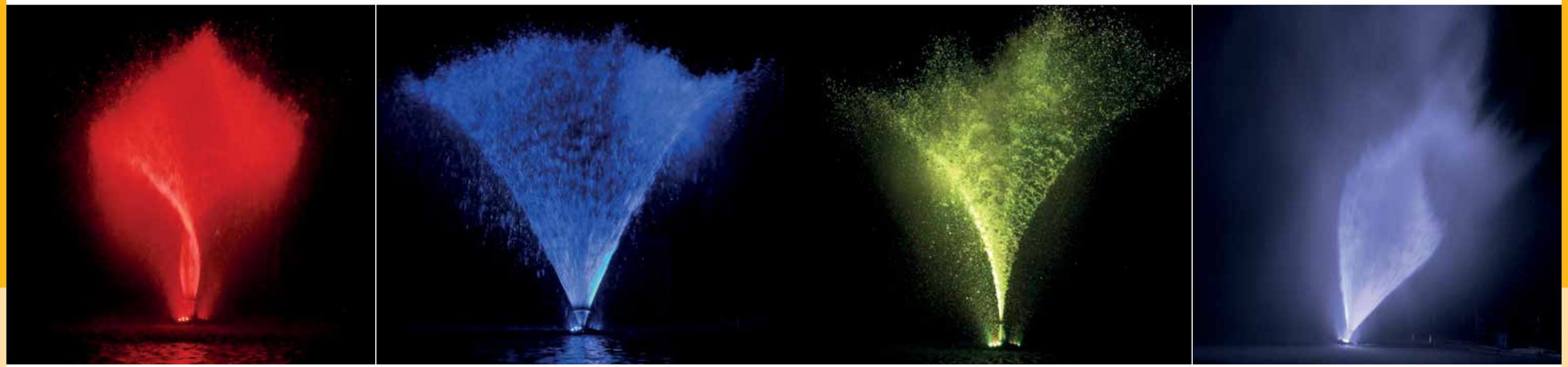

	Fresh Water	Pool Water	Sea Water	220-240 V	400 V	110-120 V	50 Hz	60 Hz	12 V AC	24 V DC	DMX	DMX/ RDM	Plug and Spray
LED Modul MDD XL 2D /DMX/02	●	●	●	○	○	○	○	○	○	●	●	●	●
LED Modul MDD XL 3D /DMX/02	●	●	●	○	○	○	○	○	○	●	●	●	●

LED Modul MDD XL 2D /DMX/02
LED Modul MDD XL 3D /DMX/02

LED Modul is designed for the Multi Directional Drive XL 2D /DMX/02 / Multi Directional Drive XL 3D /DMX/02. This module consists of three energy efficient LED RGBW - lights with 11° / 31° beam angle, a holder and Underwater LED Driver /DMX/02.

Product characteristics at a glance

- 3 x energy efficient LED-RGBW-light with mounting bracket, fine adjustment and holder for using with Multi Directional Drive XL 2D/3D

LED Modul MDD XL 2D /DMX/02

- 3 x 1707 Lumen with a beam angle of 11°/ 31°, 3 x 46.5 W
- Temperature controlled high class LED
- Wet and dry installation - waterproof IP 68
- For fresh water pool water and sea water
- External electronic in a separate control box / junction box – waterproof connector, easy to connect.
- DMX/RDM-capable in combination with the Underwater LED Driver /DMX/02
- Individual measurement of the basic colours of the LED-RGBW lights and the use of the Underwater LED Driver /DMX/02 guarantees equal brightness of all lights in the system and a homogeneous colour combination
- Galvanic isolation between the DMX and 24 V / DC power
- Dimensions lamp housing: (Ø x H) 482 x 100 mm
- Strobe effect
- Lifetime of up to 50.000h*

*In case of underwater application, an intelligent heat management and quality LED enables a lifetime of up to 50.000 hrs. This claim does not entitle to a guarantee.

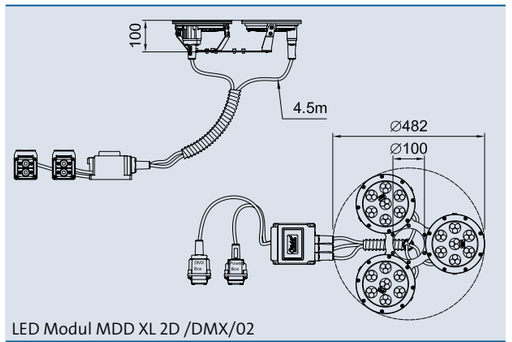

LED Modul MDD XL 2D /DMX/02

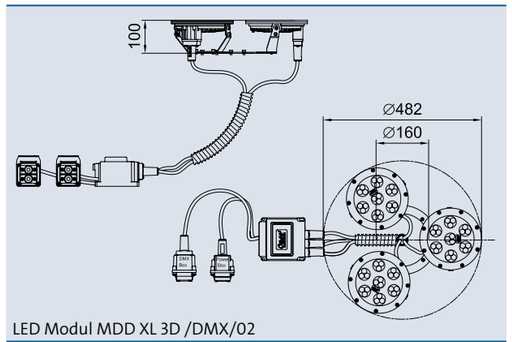

LED Modul MDD XL 3D /DMX/02

LED Modul MDD		XL 2D /DMX/02	XL 3D /DMX/02
Luminous flux all on	[lm]	3 x 1707	3 x 1707
Luminous flux red	[lm]	3 x 266	3 x 266
Luminous flux green	[lm]	3 x 821	3 x 821
Luminous flux blue	[lm]	3 x 271	3 x 271
Luminous flux white	[lm]	3 x 349	3 x 349
Colour temperature LED white	[K]	4000 (± 200)	4000 (± 200)
Colour Rendering Index (CRI)	[%]	80	80
Beam angle	[°]	11 (± 2)	31 (± 2)
Strobe effect	[Hz]	25	25
Energy efficiency class of light fixture		B	B
Weighted energy consumption per light fixture	[kWh/1000h]	52	52
Rated voltage	[V/DC]	24	24
Power consumption	[W]	139.5	139.5
Rated current	[A]	6.3	6.3
Dim frequency	[Hz]	2800	2800
Power connection		1.00 m cable with box	1.00 m cable with box
DMX connection		1.00 m cable with box	1.00 m cable with box
Protection class		IP 68	IP 68
Dimensions (Ø x H)	[mm]	482 x 100	482 x 100
Material		Stainless steel 1.4404 (AISI 316 L)	Stainless steel 1.4404 (AISI 316 L)
Weight	[kg]	14.4	14.4
Order no.		45077	48638

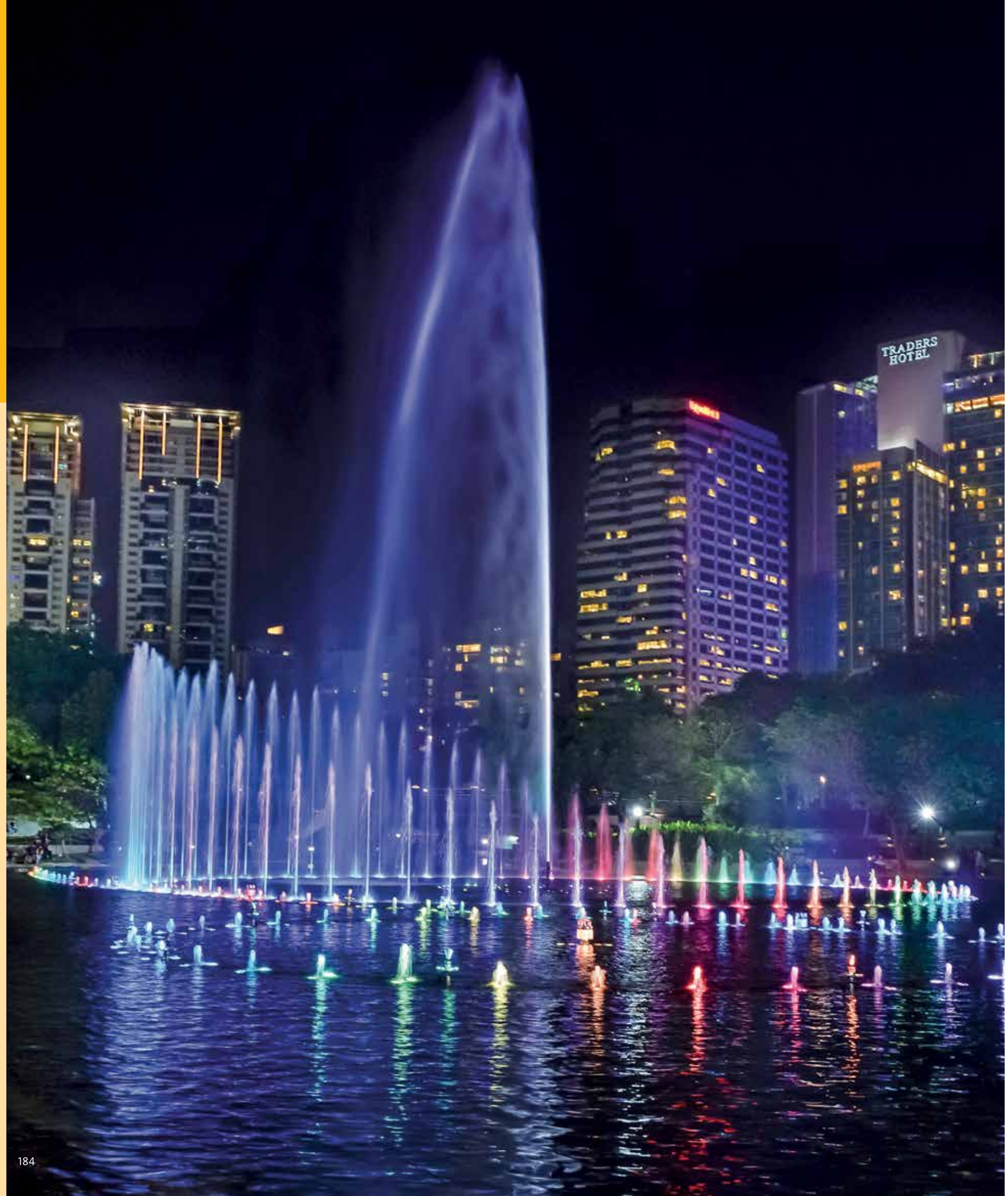

Measure – Control – Regulate

Smart entertainment 'Made in Germany': OASE not only ensures the most exciting fountain shows worldwide, but we also enable the components to communicate with each other. Whether pump, nozzle or light – thanks to DMX/RDM technology, the entire system is networked, and it can be controlled via the OASE Water Entertainment Control System (WECS) II. Music, moving images, lasers or pyrotechnics can be operated via the system. This enables first-class service: Fountain installations can be remotely maintained and updated with the latest software. The system informs you before a problem occurs.

POWER

186 Cable ducts
188 Underwater cable connectors
188 JunctionBox
190 Power splice
192 Connecting cable power
194 Connecting cable DMX
194 DMX-Box /01
196 Extension cable hybrid
197 Hybrid connection box
197 Power connection box
198 Underwater LED Driver
200 Underwater Switch
202 Underwater power supply
204 Electrical switch
206 WECS II 512/1024
208 WECS II 512/1024 Webserver extension
210 WEPS Software
212 WECS II 2048
214 WECS Software
216 Electronic water level control
216 Solenoid valves
218 Water-level sensors
220 Wind-dependent fountain control
222 Underwater transformer
223 Accessories

Power

	Fresh Water	Pool Water	Sea Water	220-240 V	400 V	110-120 V	50 Hz	60 Hz	12 V AC	24 V DC	DMX	DMX/ RDM	Plug and Spray
Cable transition	●	○	○	○	○	○	○	○	○	○	○	○	○

Cable transition 1/10 E and 2/15 E Cable transition 4/70 T, 7/100 T and 12/100 T

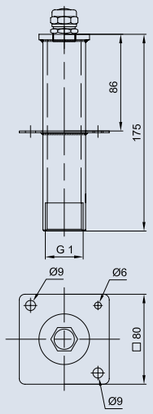

Cable transition 1/10 E

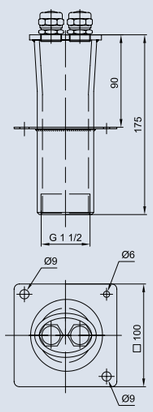

Cable transition 2/15 E

Cable transition 1/10 E

Cable transition 2/15 E

Electrical cables are routed under the water surface in all types of pools via cable transition armatures, in a manner that keeps cable transitions waterproof and invisible.

Product characteristics at a glance

- Elegant and professional connection to cable protection pipes
- Water-tight cable transitions through concrete basins
- Some units are suitable for liner
- Plug connection for connecting to the KG channel pipe or ED house installation pipe

Cable transition		1/10 E	2/15 E
Dimensions (W x H)	[mm]	80 x 175	100 x 175
Number of cable connections	[pieces]	1	2
Suitable for cable diameter	[mm]	7 – 14	7 – 14
Connections	[inch]	1	1½
Material		Stainless steel 1.4571 (AISI 316Ti)	
Weight	[kg]	0.6	0.9
Order no.		51741	51740

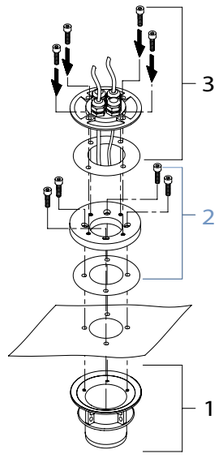

1 The concrete part is the basis of every configuration. Available for DN 70 and/or DN 100 pipes.

2 The clamping flange for fastening with or without liner. Products without cable transitions are listed on page 246 ff.

3 Depending on the requirement a decision is made at this point concerning the specific implementation: Plug, sieve, overflow or level regulator.

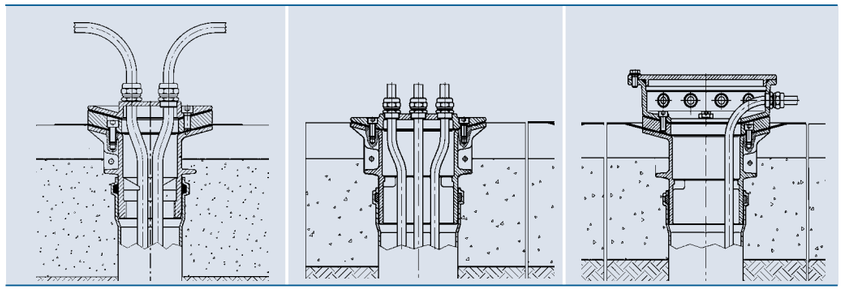

3

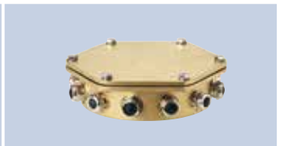

	Cable transition 4/70 T	Cable transition 7/100 T	Cable transition 12/100 T
Dimensions (ø x H) [mm]	150 x 50	190 x 50	230 x 70
Designation	cable transition	cable transition	cable transition
Number of cable connections [pieces]	4	7	12
Connection	DN 70	DN 100	DN 100
Material	Tombac	Tombac	Tombac
Weight [kg]	1.1	1.9	5.5
Order no.	57470	57464	57465

2 (optional)

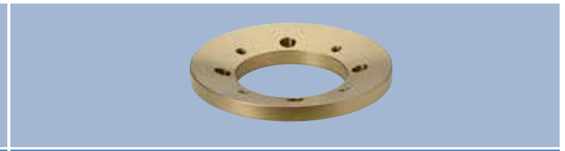

	Liner clamping flange 70 T KD	Liner clamping flange 100 T KD
Dimensions (ø x H) [mm]	148 x 27	188 x 27
Designation	liner clamping flange KD	liner clamping flange KD
Connection	DN 70	DN 100
Material	Tombac	Tombac
Weight [kg]	2.0	2.9
Order no.	57473	57474

1

	Concrete part 70 T	Concrete part 100 T
Dimensions (ø x H) [mm]	70 x 110	100 x 141
Designation	concrete part	concrete part
Connection	DN 70 / 2"	DN 100
Material	Tombac	Tombac
Weight [kg]	2.1	3.2
Order no.	57471	57467

Please follow the international and local norm

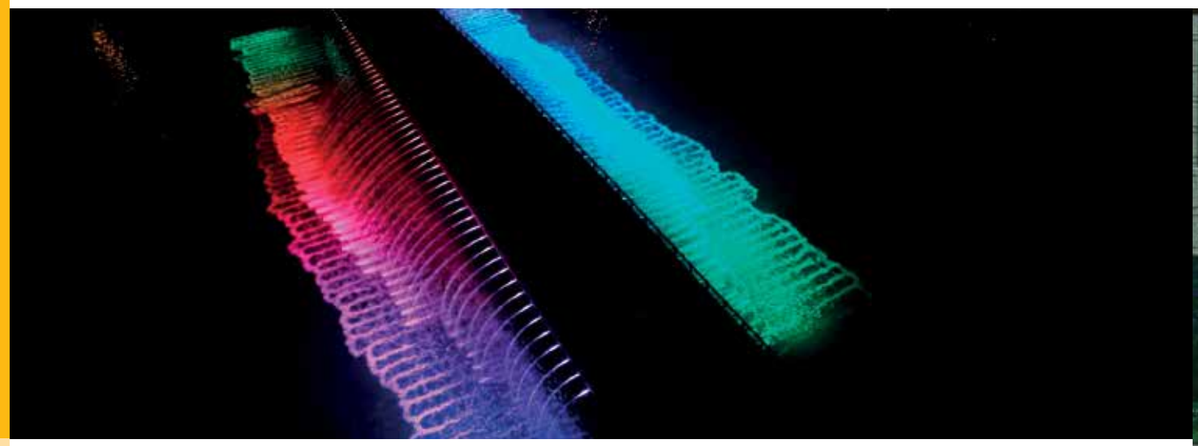

	Fresh Water	Pool Water	Sea Water	220-240 V	400 V	110-120 V	50 Hz	60 Hz	12 V AC	24 V DC	DMX	DMX/ RDM	Plug and Spray
Underwater cable connector	●	○	○	●	●	●	●	●	●	●	●	●	○
JunctionBox	●	○	○	●	●	●	●	●	●	●	●	●	○

Underwater cable connector T 3 JunctionBox 8/M20 / 14/M20

OASE underwater cable connectors are used for connecting and separating elements for electrical consumers, such as underwater pumps, or underwater spotlights, in all areas of water technology.

They enable trouble-free connection and disconnection of consumers from supply lines. Separation is necessary for example if the consumer must be removed for service purposes. With OASE underwater cable connectors, usually connecting and disconnecting is possible without draining the water.
All types have a transparent lid. Several blind plugs are supplied with each underwater cable connector to seal unused cable glands.

Product characteristics at a glance

- A solution that has proven itself in practice
- For small, medium-sized, and larger consumers
- With transparent lid for checking
- Corrosion resistant

Underwater cable connector T 3

Cable connectors are connecting and separating elements for electrical consumers in all areas of water technology. Consumers can be conveniently connected and disconnected – and thanks to OASE – even without draining the water!

The new JunctionBox is a revolution in the field of underwater cable connectors: It is easy to install and offers many combination possibilities.
The JunctionBox is available in 2 standard versions: The JunctionBox 8/M20 contains 8 and the 14/M20 comes with 14 pieces of M20 cable glands.

Product characteristics at a glance

- 8 or 14 cable glands
- Easy service

JunctionBox 8/M20 and 14/M20

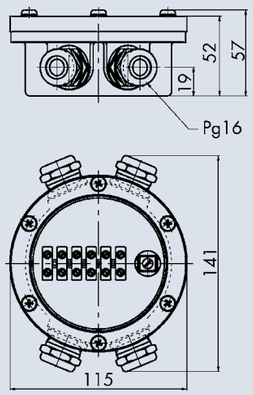

Underwater cable connector T 3

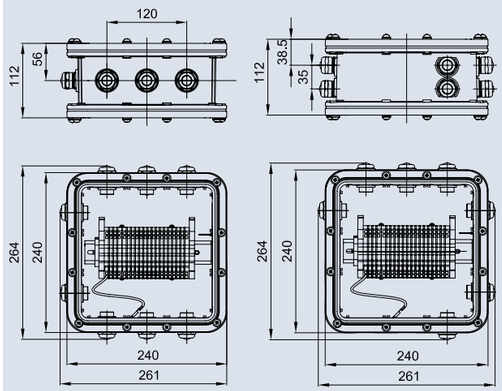

JunctionBox 8/M20 JunctionBox 14/M20

	Underwater cable connector T 3	JunctionBox 8/M20	JunctionBox 14/M20
Dimensions (L x W x H) [mm]	(Ø x H) 115 x 57	264 x 261 x 112	264 x 261 x 112
Protection class	IP 68	IP 68	IP 68
Number of cable glands [pieces]	4 x M20	8 x M20	14 x M20
Suitable for cable diameter	6 - 13	9 - 16	9 - 16
Number of terminals [pieces]	5	16 (4 mm²)	18 (4 mm²)
Number of PE terminals [pieces]	1	5 (4 mm²)	6 (4 mm²)
Material	Tombac	PET-GF45 / Makrolon	
Weight [kg]	1.2	3.4	3.9
Order no.	51334	57486	50358

Please follow the international and local norm

Power
Underwater cable connectors

	Fresh Water	Pool Water	Sea Water	220-240 V	400 V	110-120 V	50 Hz	60 Hz	12 V AC	24 V DC	DMX	DMX/ RDM	Plug and Spray
Power splice 20	●	●	●	●	●	●	●	●	●	●	●	●	○

Power splice 20

Underwater cable connector (1 to 1) for different cable diameter from 7 to 10 millimeters, wire diameters from 0.2 mm ² to 2.6 mm².

Packing unit 3

Power splice 20

Power splice 20

Scope of Delivery

- **1 - Potting material 2k**
- **2 - Sandpaper**
- **3 - Pair of gloves**
- **4 - Crimp connector 0.2 mm² - 0.5 mm²**
- **5 - Crimp connector 0.6 mm² - 1.0 mm²**
- **6 - Crimp connector 1.1 mm² - 2.6 mm²**
- **7 - Cable tie**
- **8 - Pipe with grommet**

Set for 3 connections with 1 bag potting material

Tools needed on site

- **Side cutter**
- **Crimp tool**
- **Wire stripper**
- **Cutter knife**

Power splice 20		
Dimensions (Ø x H)	[mm]	26 x 150
Suitable for		DMX-cable, hybrid cable, 24 V DC, 12V AC, 230V, 400V
Protection class		IP 68
Suitable for cable diameter	[mm]	7 - 10
Material		PET
Weight	[kg]	0.50
Packaging unit	[pieces]	3
Order no.		57648

	Fresh Water	Pool Water	Sea Water	220-240 V	400 V	110-120 V	50 Hz	60 Hz	12 V AC	24 V DC	DMX	DMX/ RDM	Plug and Spray
Power splice 43	●	●	●	●	●	●	●	●	●	●	○	○	○

Power splice 43

Underwater cable connector (1 to 1-4) for different cable diameters from 5.5 to 16 millimeters, wire diameters from 1.1 mm² to max. 10 mm².

Packing unit 2

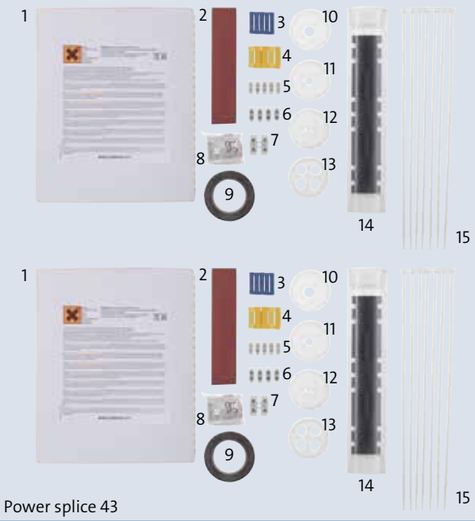

Power splice 43

Power splice 43

Scope of Delivery

- **1 - Potting material 2k**
- **2 - Sandpaper**
- **3 - Crimp connector 1,1 mm² - 2,6 mm²**
- **4 - Crimp connector 4 mm² - 6 mm²**
- **5 - Luster terminal 0,5 mm² - 1,5 mm²**
- **6 - Luster terminal 1,5 mm² - 4 mm²**
- **7 - Luster terminal 10 mm²**
- **8 - Pair of gloves**
- **9 - Adhesive tape**
- **10 - Grommet d 11,5 mm**
- **11 - Grommet d 8,5 mm**
- **12 - Grommet d 5 mm**
- **13 - Grommet 4 x d 11 mm for distributor**
- **14 - Pipe with grommet + holder insert**
- **15 - Cable tie**

Set for 2 connections (VE 2)

Tools needed on site

- **Slotted screwdriver**
- **Side cutter**
- **Cutter knife**
- **Crimp tool**
- **Wire stripper**

Power splice 43		
Dimensions (Ø x H)	[mm]	48 x 240
Suitable for	[V]	Hybrid cable, 24 V DC, 12V AC, 230V, 400V
Protection class		IP68
Suitable for cable diameter	[mm]	5.5 - 16
Material		PET
Weight	[kg]	0.70
Packaging unit	[pieces]	2
Order no.		57649

	Fresh Water	Pool Water	Sea Water	220-240 V	400 V	110-120 V	50 Hz	60 Hz	12 V AC	24 V DC	DMX	DMX/ RDM	Plug and Spray
Connection cable 12 V AC	●	●	●	○	○	○	●	●	●	○	○	○	●
Connection cable 24 V DC	●	●	●	○	○	○	○	○	○	●	○	○	●
PowerBox 12 V AC /01	●	●	●	○	○	○	●	●	●	○	○	○	●
PowerBox 24 V DC /01	●	●	●	○	○	○	○	○	○	●	○	○	●

Connection cable 12 V AC /01 and 24 V DC /01

OASE connection cables 12 V AC /01 and 24 V DC /01 are designed specially for underwater applications.

The unique connection sockets are IP 68 rated. The gaskets are integrated in the plugs.

Product characteristics at a glance

- female / female connections
- IP 68 rated
- 24 V DC reverse polarity protection

Connection cable 12 V AC

Connection cable 24 V DC

The World's first IP 68 underwater cable connection technology.

An optimally coordinated and patented connection technology: The axial flat seal with integrated capillary lock of the cable guarantee a transverse and longitudinal water tightness of both the connectors and the associated connection boxes (PowerBox) up to a depth of 4 metres.

The IP 68 connection technology not only ensures long-lasting safety but it is also very easy to install. No more cumbersome and insecure wiring by an electrician at the construction site. Thus as a complete system can be easily assembled from our diverse range of pumps, LED lighting, JumpingJets and many more together with our IP 68 pluggable cables and power supplies. The 24 V plug is mechanically protected against polarity reversal. This prevents short circuits by interchanged contacts.

Accessories (must be ordered separately)

Power splice 20	57648

Connection cable 12 V AC /01	1.0 m	1.5 m	3.0 m	7.5 m	15.0 m	PowerBox 12 V
Female 12 V AC /01 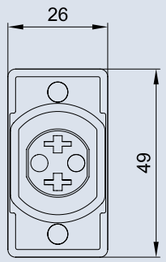	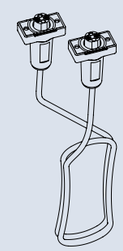	–	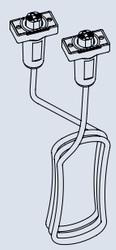	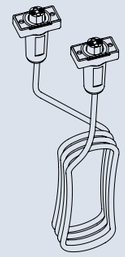	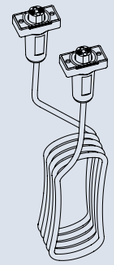	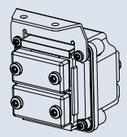
Female 24 V DC /01 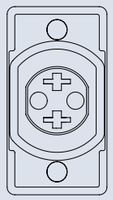	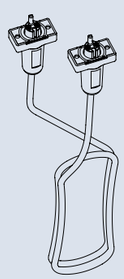	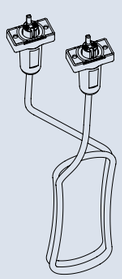	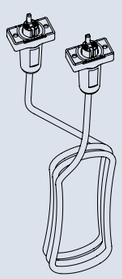	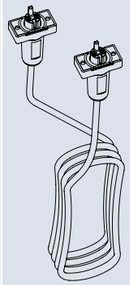	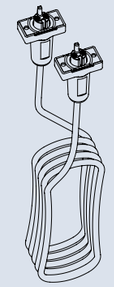	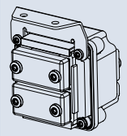

Connection cable 12 V AC /01		1.0 m	–	3.0 m	7.5 m	15.0 m	PowerBox 12 V
Length	[m]	1.0	–	3.0	7.5	15.0	–
Cable diameter	[mm²]	2 x 2.5	–	2 x 2.5	2 x 2.5	2 x 2.5	–
Weight	[kg]	0.2	–	0.4	1.4	2.6	0.47
Order no.		12768	–	12374	12375	11740	50492

Connection cable 24 V DC /01		1.0 m	NEW 1.5 m	3.0 m	7.5 m	15.0 m	PowerBox 24 V
Length	[m]	1.0	1.5	3.0	7.5	15.0	–
Cable diameter	[mm²]	2 x 2.5	2 x 2.5	2 x 2.5	2 x 2.5	2 x 2.5	–
Weight	[kg]	0.3	0.38	0.75	1.53	2.92	0.47
Order no.		12762	49629	12552	12553	11720	50493

	Fresh Water	Pool Water	Sea Water	220-240 V	400 V	110-120 V	50 Hz	60 Hz	12 V AC	24 V DC	DMX	DMX/ RDM	Plug and Spray
DMX-connection cable	●	●	●	○	○	○	○	○	○	○	●	●	●
DMX-Box /01	●	●	●	○	○	○	○	○	○	○	●	●	●

DMX-connection cable and DMX-Box /01

OASE connection cable DMX /01 cables are designed specially for underwater applications.

The unique connection sockets based on XLR standards (5-pole) are IP 68 rated. The gaskets are integrated in the plugs.

Product characteristics at a glance

- Female / male connections
- IP 68 rated
- 2-core shielded
- DMX/RDM capable

The DMX-Box /01 is for the connection of DMX cable.

The DMX-Box /01 can be used for Extensions of DMX cable.

Product characteristics at a glance

- Female / male connection
- IP 68 rated
- DMX/RDM capable

Connection cable DMX

DMX-Box /01

The World's first IP 68 underwater cable connection technology.

An optimally coordinated and patented connection technology: The axial flat seal with integrated capillary lock of the cable guarantee a transverse and longitudinal water tightness of both the connectors and the associated connection boxes (DMX box) up to a depth of 4 metres.

The IP 68 connection technology not only ensures long-lasting safety but it is also very easy to install. No more cumbersome and insecure wiring by an electrician at the construction site. Thus as a complete system can be easily assembled from our diverse range of pumps, LED lighting, JumpingJets and many more together with our IP 68 pluggable cables and power supplies. The 24 V plug is mechanically protected against polarity reversal. This prevents short circuits by interchanged contacts.

Distance piece with blind caps

Accessories (must be ordered separately)

Power splice 20	57648
Distance piece with blind caps	46230

Connection cable DMX /01	1.0 m	NEW 1.5 m	3.0 m	5.0 m	10.0 m	20.0 m	End resistant for BUS-system DMX /01	DMX-Box /01
Female								
Male								

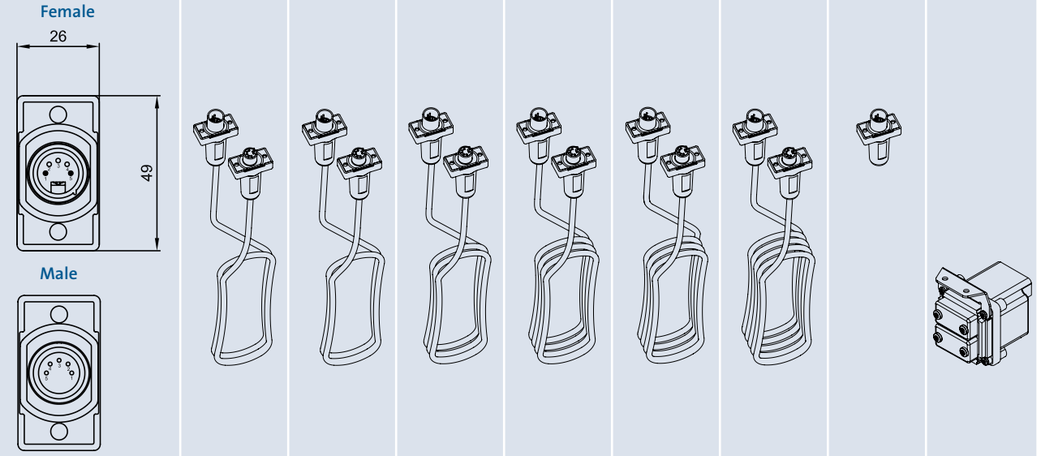

Connection cable DMX /01	1.0 m	1.5 m	3.0 m	5.0 m	10.0 m	20.0 m	End resistant for BUS-system DMX /01	DMX-Box /01
Length [m]	1.0	1.5	3.0	5.0	10.0	20.0	–	–
Cable diameter [mm²]	2 x 0.34	2 x 0.34	2 x 0.34	2 x 0.34	2 x 0.34	2 x 0.34	–	–
Weight [kg]	0.1	0.2	0.3	0.4	0.6	1.1	0.1	0.1
Order no.	12368	49628	12369	12371	12372	12373	12007	57646

Power
Connection cables

	Fresh Water	Pool Water	Sea Water	220-240 V	400 V	110-120 V	50 Hz	60 Hz	12 V AC	24 V DC	DMX	DMX/ RDM	Plug and Spray
Extension cable hybrid	●	●	●	○	○	○	○	○	○	●	●	●	●

Extension cable hybrid 3.0 m /01 and 7.5 m /01

OASE Extension cable hybrid are designed for underwater applications as well.

The Extension cable hybrid (data+ power supply) are suitable for:
- ProfiLux LED 110 /DMX/02 (56267)
- ProfiPlane LED 110 /DMX/02 (56298)
- ProfiLux LED 320 /DMX/02 (50717)
- ProfiRing LED 320 /DMX/02 (50718)
- ProfiPlane LED 320 /DMX/02 (50719)
- ProfiLux LED Spot 1500 /DMX/02 (56388)
- ProfiLux LED Flood 1500 /DMX/02 (56391)

Only one extension cable can be used per LED unit.

Product characteristics at a glance
- Extension cable hybrid 3.0 m or 7.5 m long with connector
- Female / male connections
- IP 68 protection
- 4-core shielded

Extension cable hybrid / 3.0 m /01

Scope of delivery
- 4 x screw M5
- 1 x cable
- 1 x connector
- 1 x gland seal

Accessories (must be ordered separately)

Power splice 20	57648

Extension cable hybrid	3.0 m /01	7.5 m /01
Male		
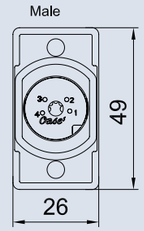	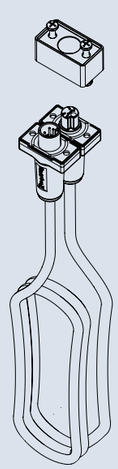	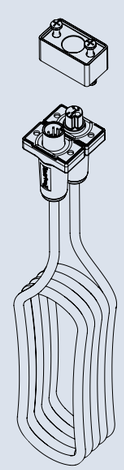
Female		
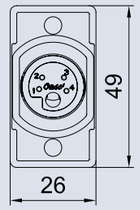		

Extension cable hybrid		3.0 m /01	7.5 m /01
Length	[m]	3.0	7.5
Cable diameter	[mm²]	4 x 0.34	2 x 1; 2 x 0.24
Weight	[kg]	0.38	0.75
Order no.		50728	56403

	Fresh Water	Pool Water	Sea Water	220-240 V	400 V	110-120 V	50 Hz	60 Hz	12 V AC	24 V DC	DMX	DMX/ RDM	Plug and Spray
Hybrid connection box	●	●	●	○	○	○	○	○	○	●	●	●	●
Power connection box 24 V	●	●	●	○	○	○	○	○	○	●	○	○	●

Hybrid connection box

Product characteristics at a glance
- Hybrid connection box for max. 4 lights (ProfiLux LED 110 /DMX/02 or ProfiPlane LED 110 /DMX/02)
- All 4 outlets just simultaneously controllable
- RDM status information from outlet 1
- Female / male connection
- Protection class IP 68
- Only one connection box per Line

Accessories (must be ordered separately)

Extension cable hybrid (see page 196)	Order no.
Extension cable hybrid / 3.0 m /01	50728
Extension cable hybrid / 7.5 m /01	56403

Hybrid connection box

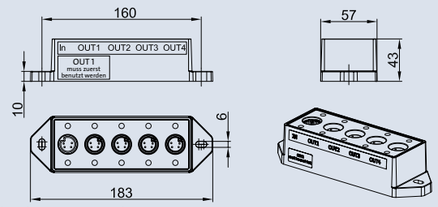

Hybrid connection box

Hybrid connection box		
Dimensions (L x W x H)	[mm]	183 x 57 x 43
Maximum current	[A]	7,5
Weight	[kg]	0,4
Order no.		56404

Power connection box 24 V

Product characteristics at a glance
- Power connection box 24 V, max. 10 A for max. 4 units (ideal for AirNozzles or white 24 V lights)
- All 4 outlets just simultaneously controllable
- Male connections
- Protection class IP 68
- only one Connection box per Line

Accessories (must be ordered separately)

Connecting cable 24 V DC /01 (see page 192)	Order no.
Connecting cable 24 V DC / 1.0 m /01	12762
Connecting cable 24 V DC / 1.5 m /01	49629
Connecting cable 24 V DC / 3.0 m /01	12552
Connecting cable 24 V DC / 7.5 m /01	12553
Connecting cable 24 V DC / 15.0 m /01	11720

Power connection box 24 V

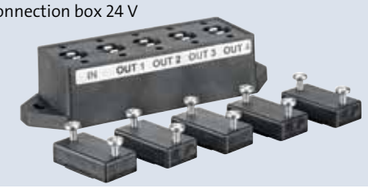

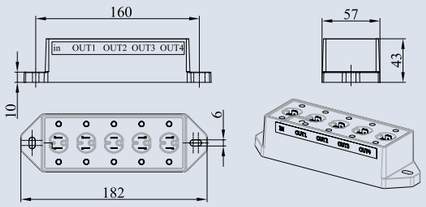

Power connection box 24 V

Power connection box 24 V		
Dimensions (L x W x H)	[mm]	182 x 57 x 43
Max. input current	[A]	10
Weight	[kg]	0,4
Order no.		47930

	Fresh Water	Pool Water	Sea Water	220-240 V	400 V	110-120 V	50 Hz	60 Hz	12 V AC	24 V DC	DMX	DMX/ RDM	Plug and Spray
Underwater LED Driver	●	●	●	○	○	○	○	○	○	●	●	●	●

Underwater LED Driver /DMX/02

The Underwater LED Driver / DMX / 02 is the driver for LED-RGB(W) light: Up to 4 lights can be controlled individually.

The LED-RGB (W) lights in combination with the Underwater LED Driver can be controlled via DMX/RDM. They send back information like running time to the electrical controller. These status signals enable remote diagnosis and remote maintenance. This is the service concept for the future.
Due to its robust construction, the whole system is suitable for fresh water, pool water and sea water applications (for definition see page 260).The Underwater LED Control is equipped with one DMX-box with one meter cable and one power-box with one meter cable (for power supply). The waterproof plug-in connection system eliminates the need for manual wiring of the individual strands.

Underwater LED Driver /DMX/02

Product characteristics at a glance

- Controller for LED-light
- Underwater LED control for:

ProfiLux LED 110 /DMX/02	56267
ProfiPlane LED 110 /DMX/02	56298
ProfiLux LED 320 /DMX/02	50717
ProfiRing LED 320 /DMX/02	50718
ProfiPlane LED 320 /DMX/02	50719
ProfiLux LED Spot 1500 /DMX/02	56388
ProfiLux LED Flood 1500 /DMX/02	56391

- Input: 1 x 24 V / DC; 1 x DMX/RDM
- Up to 4 LED Spots
- Individually controllable via DMX/RDM
- IP 68 protection
- With patented underwater connection technology

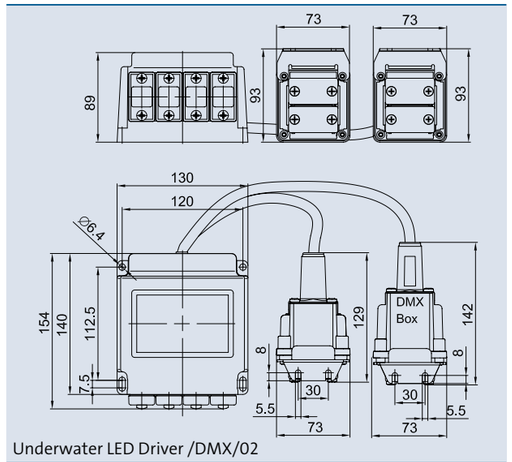

Underwater LED Driver /DMX/02

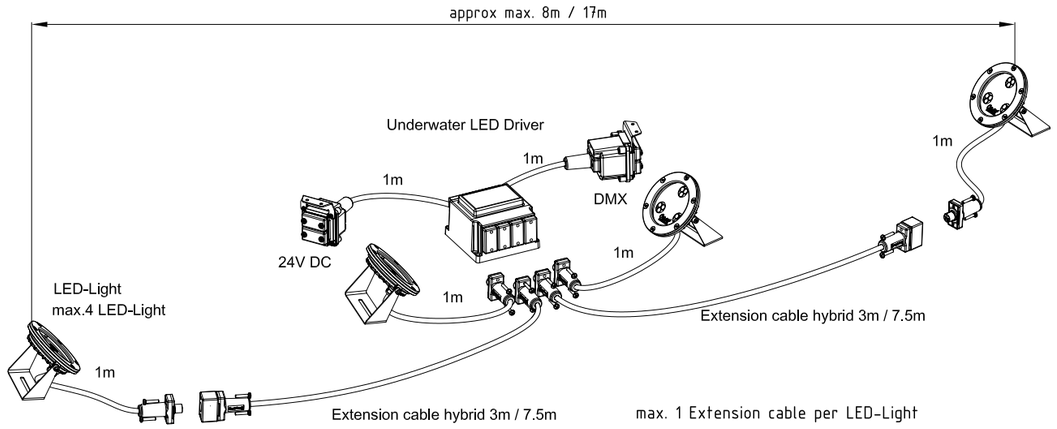

Accessories (must be ordered separately)

Connecting cable DMX /01 (see page 194)	Order no.
Connecting cable DMX / 1.0 m /01	12368
Connecting cable DMX / 1.5 m /01	49628
Connecting cable DMX / 3.0 m /01	12369
Connecting cable DMX / 5.0 m /01	12371
Connecting cable DMX / 10.0 m /01	12372
Connecting cable DMX / 20.0 m /01	12373
End resistant for BUS-system DMX/01	12007
Connecting cable 24 V DC /01 (see page 192)	**Order no.**
Connecting cable 24 V DC / 1.0 m /01	12762
Connecting cable 24 V DC / 1.5 m /01	49629
Connecting cable 24 V DC / 3.0 m /01	12552
Connecting cable 24 V DC / 7.5 m /01	12553
Connecting cable 24 V DC / 15.0 m /01	11720
Underwater power supply 250 / 24 V /01 (see page 202)	50733
WECS II 512 /DMX/02 (see page 206)	56491
WECS II 1024 /DMX/02 (see page 206)	56492
WECS II 2048 /DMX/02 (see page 212)	56507

Underwater LED Driver /DMX/02		
Dimensions (L x W x H)	[mm]	153 x 130 x 89
Slot		4 x Hybrid (Data + Power)
Max. secondary power	[W]	180
Protection class		IP 68
DMX Connection		1.0 m with Box
Power Connection		1.0 m with Box
Weight	[kg]	2.90
Order no.		50720

	Fresh Water	Pool Water	Sea Water	220-240 V	400 V	110-120 V	50 Hz	60 Hz	12 V AC	24 V DC	DMX	DMX/ RDM	Plug and Spray
Underwater Switch 24 V	●	●	●	○	○	○	○	○	○	●	●	●	●

Underwater Switch 24 V DC /DMX/02

The Underwater Switch 24 V DC /DMX/02 is a 24 V DC underwater switch to control all monochrome 24 V DC LED lights, 24 V DC halogen lights and AirNozzles for max. 4 devices. The DMX/RDM capable Underwater Switch 24 V DC /DMX/02 enables a reduction of the system costs by up to 50 %. Due to the 24 voltage IP 68 plug connection the device can be installed quickly and easily.

Product characteristics at a glance

- 24 V DC Underwater Switch for:
  - AirNozzle 24 V DC
  - All monochrome 24 V DC LED lights
  - 24 V DC halogen lights
- Input: 1 x 24 V DC; 1 x DMX/RDM
- Output: 4 x 24 V DC switchable
- All 4 slots are freely programmable (on/off)
- Protection class: IP 68
- Suitable for operation in sea water
- With patented underwater connection technology

Underwater Switch 24 V DC /DMX/02

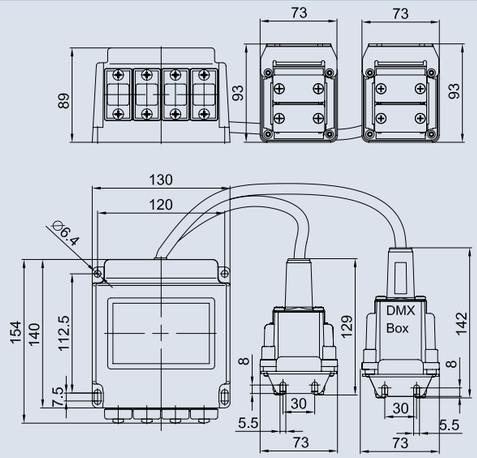

Underwater Switch 24 V DC /DMX/02

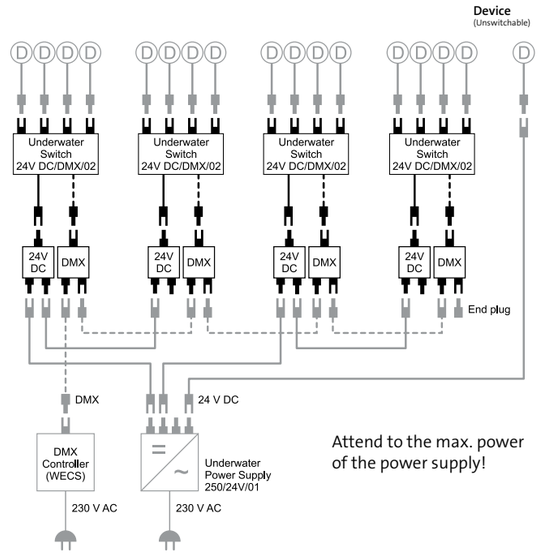

Attend to the max. power of the power supply!

Accessories (must be ordered separately)

Connecting cable DMX /01 (see page 194)	Order no.
Connecting cable DMX / 1.0 m /01	12368
Connecting cable DMX / 1.5 m /01	49628
Connecting cable DMX / 3.0 m /01	12369
Connecting cable DMX / 5.0 m /01	12371
Connecting cable DMX / 10.0 m /01	12372
Connecting cable DMX / 20.0 m /01	12373
End resistant for BUS-system DMX/01	12007

Connecting cable 24 V DC /01 (see page 192)	Order no.
Connecting cable 24 V DC / 1.0 m /01	12762
Connecting cable 24 V DC / 1.5 m /01	49629
Connecting cable 24 V DC / 3.0 m /01	12552
Connecting cable 24 V DC / 7.5 m /01	12553
Connecting cable 24 V DC / 15.0 m /01	11720

Underwater power supply 250 / 24 V /01 (see page 202)	50733
WECS II 512 /DMX/02 (see page 206)	56491
WECS II 1024 /DMX/02 (see page 206)	56492
WECS II 2048 /DMX/02 (see page 212)	56507

Underwater Switch 24 V DC /DMX/02		
Dimensions (L x W x H)	[mm]	154 x 130 x 89
Nominal input voltage	[V/DC]	24
Max. input current (depends on the connected sec. device type)	[A]	10.5
Secondary voltage	[V/DC]	4 x 24
Max. secondary current	[A]	4 x up to 2.5 A / slot switchable
Protection class		IP 68
DMX Connection		1.0 m with Box
Power Connection		1.0 m with Box
Weight	[kg]	2.9
Order no.		56411

	Fresh Water	Pool Water	Sea Water	220-240 V	400 V	110-120 V	50 Hz	60 Hz	12 V AC	24 V DC	DMX	DMX/ RDM	Plug and Spray
Underwater power supply	●	●	●	●	○	●	●	●	○	●	○	○	●

Underwater Power Supply 250 24 V /01

The Underwater power supply 250 24 V /01 is a fully potted power supply. The devices connected to the four slots do not require any wiring and guarantee a safe and long-lasting functioning under water. Even low voltage devices can now be operated with the underwater power supply which leads to enormous reduction of time and material cost at the installation sites.

The underwater power supply with the patented waterproof plug in connectors reduce installation costs. Moreover, the power supply reduces space requirement in the control panel and cable consumption and maintenance costs. The plug-in connection enables easy removal and repair or replacement of the connected devices. Fewer cables from control panel to the basin saves time and additional costs.

Product characteristics at a glance

- **24 V DC underwater power supply with high efficiency and simple installation**
- **Waterproof connectors with 4 ports (IP 68 rated)**
- **New: First registered in the United States underwater power supply for long-lasting use**

One Underwater Power Supply 250 24 V /01 (50733) can be connected with max. 2 x Varionaut 150 / 24 V or max. 3 x Varionaut 90 / 24 V or max. 4 x Underwater LED Control with 4 x ProfiPlane LED 320 /DMX/02, ProfiRing LED 320 /DMX/02 or ProfiLux LED 320 /DMX/02 (=max. 16).

Innovation – made by OASE

Underwater Power Supply 250 24 V /01

Underwater Power Supply 250 24 V /01

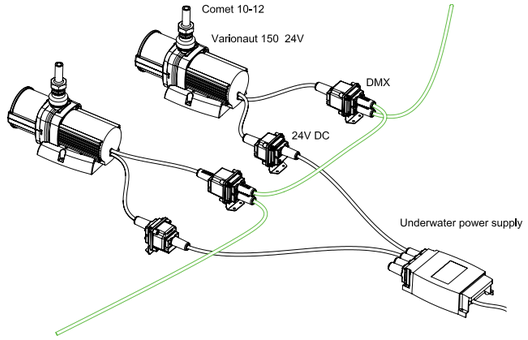

Accessories (must be ordered separately)

Connecting cable 24 V DC /01 (see page 192)	Order no.
Connecting cable 24 V DC / 1.0 m /01	12762
Connecting cable 24 V DC / 3.0 m /01	12552
Connecting cable 24 V DC / 7.5 m /01	12553
Connecting cable 24 V DC / 15.0 m /01	11720

A maximum of 80 Watt (Class2) may be applied to each output, max. 240 Watt total capacity (40289).

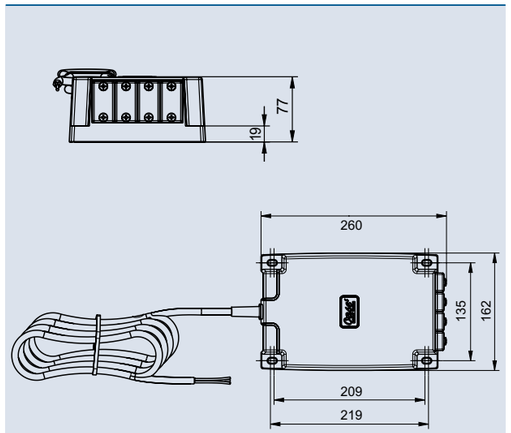

Underwater Power Supply 250 24 V /01

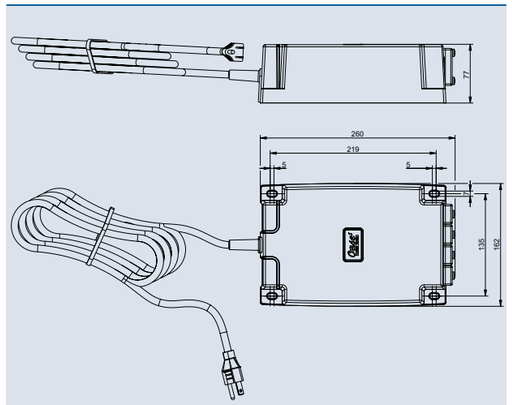

Underwater Power Supply 250 24 V /01

Underwater Power Supply 250 24 V /01		
Dimensions(L x W x H)	[mm]	260 x 162 x 77
Nominal input voltage	[V/AC]	100-240
Nominal input frequency	[Hz]	50/60
Secondary voltage	[V/DC]	25
Secondary current	[A]	10.5
Efficiency	[%]	≥90
Environmental conditions: submersible application		Water temperature: min 4°C to max. 35°C
Environmental conditions: dry application		Ambient temperature: max 40°C with natural convection, no direct sun exposure permitted
Slot	[V/DC]	4 x 24
Immersion depth max.	[m]	4
Protection class		IP 68
Cable length	[m]	10
Weight	[kg]	5.1
Order no.		50733

Please follow the international and local norm

Underwater Power Supply 250 24 V /01		
Dimensions(L x W x H)	[inch]	10.24 x 6.38 x 3.03
Nominal input voltage	[V/AC]	100-240
Nominal input frequency	[Hz]	50/60
Secondary voltage per output	[V/DC]	25
Rated capacity per output (class 2)	[W]	80
Rated capacity total	[W]	240
Secondary current	[A]	3.2
Efficiency	[%]	≥90
Environmental conditions: submersible application		Water temperature: min 4°C to max. 35°C
Environmental conditions: dry application		Ambient temperature: max 40°C with natural convection, no direct sun exposure permitted
Slot	[V/DC]	4 x 24
Immersion depth max.	[ft]	13
Protection class		IP 68
Cable length	[ft]	20
Weight	[lb]	10.6
Order no.		40289

	Fresh Water	Pool Water	Sea Water	220-240 V	400 V	110-120 V	50 Hz	60 Hz	12 V AC	24 V DC	DMX	DMX/ RDM	Plug and Spray
Switchgear	○	○	○	●	○	○	●	○	○	○	○	○	○

Electrical Switchgear in standard and special design

OASE switchgear and control centres for spray fountain or fountain installations are manufactured with the latest technology. They satisfy the VDE guidelines in all points and are equipped with all required protection and safety fixtures.

Product characteristics at a glance

- Especially suitable for public systems
- Equipped with all required protection and safety fixtures
- Wired ready-to-connect
- Special solutions are manufactured on customer request

Switchgear

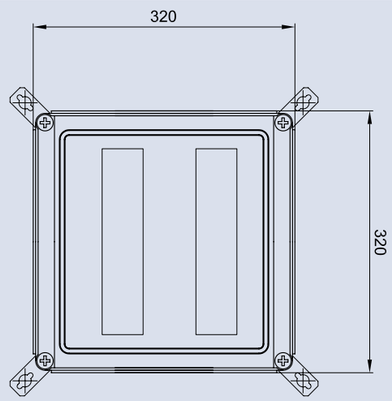

Switchgear

A residual current protection switch cuts the system off immediately if nominal residual current greater than 30 mA is detected, so that complete safety is always ensured for humans, animals and equipment. Safety cut-outs protect individual components in the event of overload and short-circuit. Special motor circuit breakers with 3-phase protection avoid the motor in the event of overload and running in 2-phases. Depending on the requirements and customer desires switchgear systems can be fitted with special start-up processes such as star-delta starting or soft start-up to ensure safe start-up of the motors.

Pump, lighting, and water level regulator can be switched on or off automatically or manually with the manual-0-automatic switch in conjunction with 2-channel timers.

On request

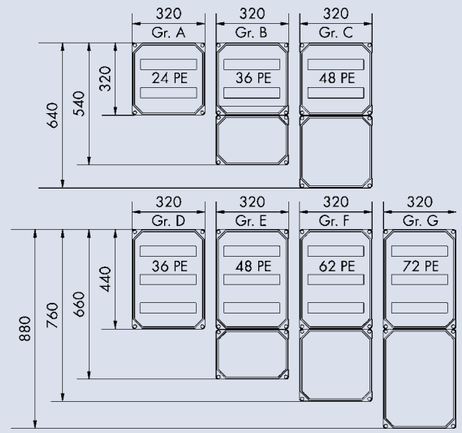

On request

The standard models offer suitable switchgear for a variety of applications. In addition OASE manufactures the perfect switchgear with all required additional fixtures for all conceivable customer requirements.

Switchgear		EL 100 W	EL 101 W	EL 110 W	EL 111 W
Dimensions (L x W x H)	[mm]	320 x 320 x 200			
Protection class		IP 55			
Input voltage	[V/Hz]	1 x 230/50			
Residual current protection switch	[A]	25/0.03			
Timer, Number of programs	[pieces]	2			
Output voltage pumps	[V]	1 x 230			
Output power pumps	[kW]	1 x 0.55			
Type of motor start-up		direct			
Output voltage illumination	[V/AC]	none	none	1 x 230	1 x 230
Output power illumination	[kW]	none	none	1 x 0,30	1 x 0,30
Output voltage water-level regulator	[V/DC]	none	24	none	24
Output voltage water-level regulator	[W]	none	1 x 15	none	1 x 15
Number of M-0-A switches	[pieces]	1	2	2	3
Number of indicator lights	[pieces]	1	2	2	3
Weight	[kg]	6.0	6.2	6.2	6.8
Order no.		51341	51342	51343	51344

	Fresh Water	Pool Water	Sea Water	220-240 V	400 V	110-120 V	50 Hz	60 Hz	12 V AC	24 V DC	DMX	DMX/ RDM	Plug and Spray
WECS II 512 / 1024													

WECS II 512 /DMX/02 and WECS II 1024 /DMX/02

The new WECS II controller generation is capable of bi-directional (DMX/RDM) communication. The WECS II 512 /DMX/02 is the new standalone Entertainment-Controller for 512 DMX/RDM-Channels, and the WECS II 1024 /DMX/02 is the new music standalone Entertainment-Controller for 1024 DMX/RDM-channels with audio file.

WECS II 512 /DMX/02 WECS II 1024 /DMX/02

Product characteristics at a glance

- Incl. Software
- Entertainment server standalone
- Entertainment server standalone with audio (56492 WECS II 1024 /DMX/02)
- 512 DMX/RDM output channels standalone
- 1024 DMX/RDM output channels standalone (56492 WECS II 1024 /DMX/02)
- 1024 DMX/RDM channels as interface for WECS II 2048
- Freely programmable inputs and outputs for controlling, shows, wind anemometers, water-level sensors, protections etc.
- User-friendliness
- Visual patching

The fanless controller transmits DMX/RDM data packets to the individual components (lights, pumps, DMX/RDM controllable nozzles, motion etc.) which enable them to act accordingly. In turn, they analyse the received data and send back their status signals like operating hours and temperature via the same cable. These status signals enable remote diagnosis and remote maintenance of the connected components.
The digital inputs can be linked to water level sensors or external push buttons. That enables to control shows and faders from outside.

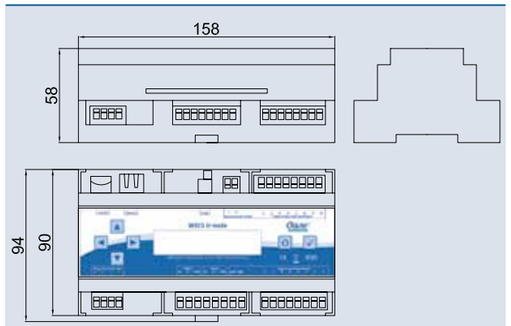

WECS II 512 /DMX/02 and WECS II 1024 /DMX/02

Furthermore, as a special feature, the OASE Wind Anemometer drives the internal wind-fader directly to control fountain heights according to the wind speed. All digital outputs can be used to switch relays and frequency converters directly.
Any number of shows or sequences for a project can be saved on the micro SD card (4 GB included).

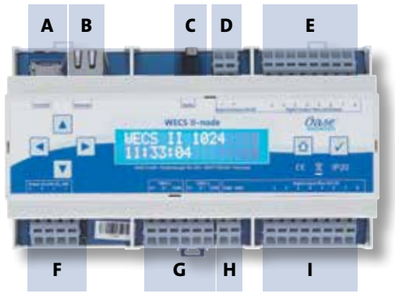

A Any number of shows or sequences for a project can be saved on the micro SD card (4GB included).
B RJ-45 Ethernet
C Audio 3,5 mm stereo jack, galvanically isolated
D Connection of voltage supply +24 V DC for digital outputs (-/+)
E 8 x digital output 1A/output, galvanically isolated
F 4 x connection to power supply (++/--) 15-24 V DC / 8 W
G 2 x DMX/RDM outputs, galvanically isolated
H 2 x grounding for digital inputs
I 8 x digital inputs, galvanically isolated

Water Entertainment Control System		WECS II 512 /DMX/02	WECS II 1024 /DMX/02
Dimensions (L x W x H)	[mm]	158 x 94 x 58 mm	
Weight	[kg]	0.33	
Housing		Polycarbonate Light grey/white/blue for top-hat rail mounting (35mm DIN rail) or wall fastening	
Protection class		IP20	
Power supply		15..24 V DC/ 8W	
Operation temperature		0..40°C / 0..80% humidity non-condensed	
Certification		CE	
Outputs DMX/RDM		512 DMX/RDM channels standalone	1024 DMX/RDM channels standalone
Outputs		8 x Digital Out (Clamps 24 V DC/ 1A max., optically isolated)	
Inputs		8 x Digital In (Clamps 24 V DC., optically isolated)	
Others connections		Ethernet RJ45 10/100Mbit	
Memory		MicroSD-Card for Show-Files	
Operation		2 x 16 Segment LCD Display with 6 keys	
Audio		–	Yes
Standaloneshows		WDS - Streamfile	WDS-Streamfile & Audio file
Interface		2 x 512 DMX/RDM channels for WECS II 2048 (O – Net)	
Scheduler		Full Day- / Week- / Yearplaner	
Special		Windcontrolled (dimming) by external signal from Oase anemometer Mat.53913	
Action Manager		Event Actions: Digital Inputs can be linked with actions (waterlevel, windspeed)	
Software		WEPS (WECS II 512/1024) for Windows 7 or better	
In the scope of delivery			
Hardware + Micro SD-Card + Software WEPS (WECS II 512/1024)			
System Documentation			
Order no.		56491	56492

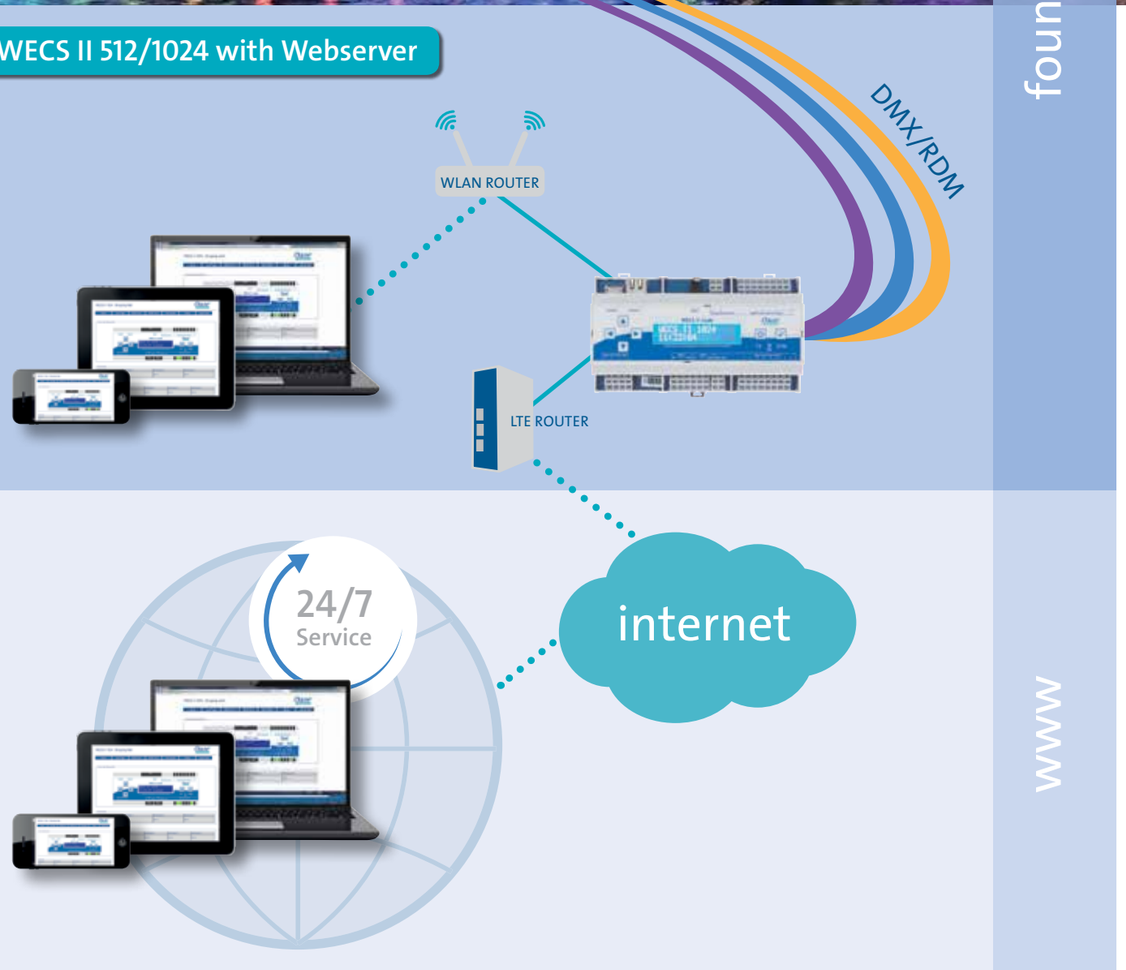

WECS II 512/1024 Webserver extension

The new WECS II 512 / 1024 Webserver extension is a software to extend the WECS II 512 /DMX/02 and WECS II 1024 /DMX/02 controller properties. By installing the software, you will receive an integrated Web server on the WECS control unit. This enables an optimum remote control of your WECS via the Internet around the clock or via the local wireless network.*

You have an overview of all inputs and outputs, the Scheduler, the shows, the files on the SD card and the RDM participants and their properties (monitoring). You have access to all basic parameters of RDM and can identify addresses and change them. The shows or sequences of a project stored on the micro SD card can be read, exchanged or even supplemented.

*Wireless router is not included in the standard scope of delivery.

Product characteristics at a glance

- Integrated webserver for DMX/RDM Controller
- Easy direct access and report of all controllable products
- 24/7 remote access
- Monitoring (properties): Input Status overview, Output Status overview, Wind speed, Faders, Volume, Scheduler Running, Show Running, Date, Time.
- RDM Parameter Basic Access: Basic-Access to Reset, identify DMX-Addresses
- Remote Access: Start Show from Auto-generated List/ Stop Show / Start Scheduler/ Stop Scheduler/ WECS-Configuration (Date/Time/IP).
- File upload: Show transfer, Project-Upload (Shows, Scheduler, Script) Firmware update

Innovation – made by OASE

WECS II 512/1024 webserver-Extension

http://www.oase-livingwater.com/en_EN/service/download/

WECS II 512/1024 Webserver-Extension	
Order no.	43525

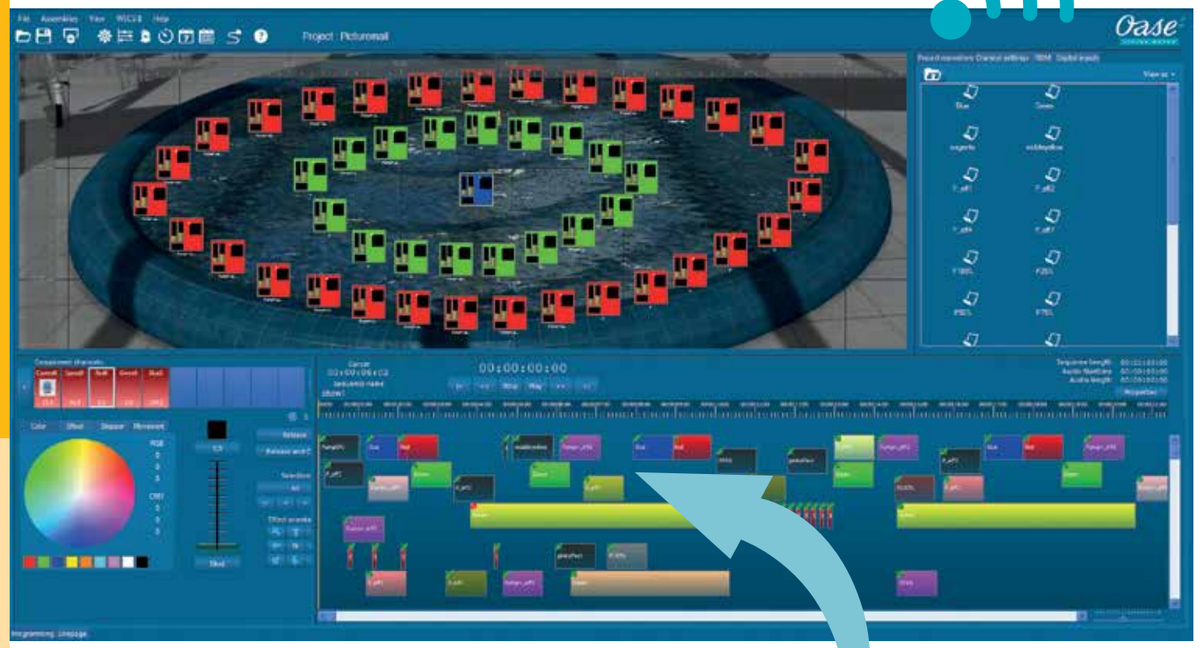

WEPS Software

With the WECS II (Water Entertainment Control System) fountain shows can be freely programmed and played synchronously to the music in a desired time schedule accurately to the second. The Software WEPS (Water Entertainment Programming Software) comes as standard with the WECS II.
The WEPS software can be downloaded free of cost and a visualized fountain show can be pre-programmed with it (registration to OASE Dealer Portal required).

http://www.oase-livingwater.com/en_EN/service/download/

The WEPS-Software is suitable for creating shows for small and mid-size systems. A graphical overview of the system configuration enables creating different water pictures and scenes in an optical style. These can be used individually as background for your show. The control data can be sent in real time to a connected "OASE WECS II" system enabling "Live" immediate control of a show system. You can start your programmd show manually from the hardware. Or you let start the show automatically with the scheduler.

User friendly Sequencer
Lighting scenes pump scenes, moving elements can be arranged and cobined with a music file on the sequencer timeline.

The easy handling of the real time show visualizer provides an effortless way to integrate you full multimedia show. Furthermore, a sequence can be started via the external inputs or the scheduler.

Live page
Take full control of your shows from your Windows® tablet. A quick start of the individual shows is possible from a PC or Windows® tablet.

Microsoft and Windows are either registered trademarks of Microsoft Corporation in the United States and/or other countries..

WEPS Software

Scheduler

This software provides a combination of different schedulers for the automation of all processes. By the combination of daily planners, weekly planners and annual planners, it is possible to design a huge number of automated processes.

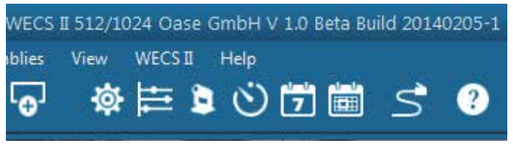

Patching

Single fixtures are pooled spatially to assemblies. An assembly can also consist of a single component (e.g. a pump). Afterwards, these assemblies can be moved and arranged optionally at the top view of the fixture.
An advantage of this working method, for example, would be in creating a matrix. Located at the spatial point is the pump as well as the RGBW spot and all other accessories such as the nozzle type and other small items. These single fixtures can be pooled in one assembly and later positioned spatially.

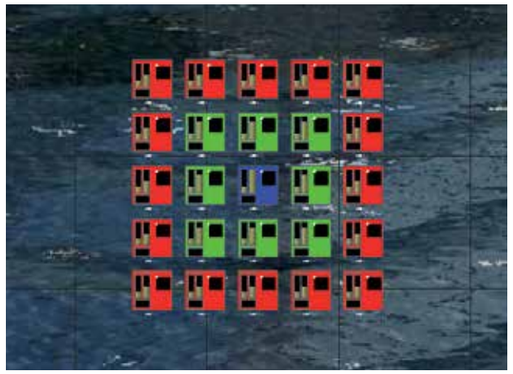

Programmer

The programmer has a huge number of possibilities for creating different effects.

Static scenes: In static scenes, a timely constant value can be assigned to an assembly selection in selected channels.

Dynamic scenes: A dynamic scene consists of a static scene with a further delay. The delay is splitted equally under selected assemblies and sorted in the order of selection. A static effect which can be used for all selected assemblies is started according to it's delays. By this, the gained water picture receives an effective dynamic.

Effect scenes: An effect scene consists of a static scene with overlayed and mathematical time function (e.g. sinus, rectangle, saw tooth). Effect scenes changes its value depending on time.

All three scene types can be combined in one scene.

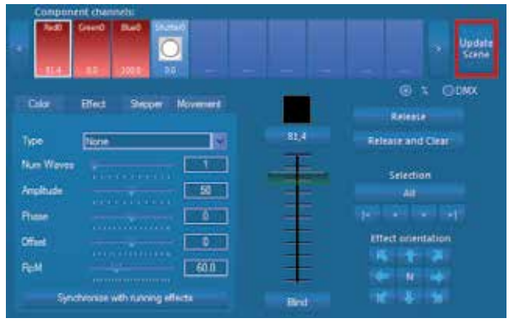

Order no.	55009

	Fresh Water	Pool Water	Sea Water	220-240 V	400 V	110-120 V	50 Hz	60 Hz	12 V AC	24 V DC	DMX	DMX/ RDM	Plug and Spray
WECS II 2048 /DMX/02	○	○	○	●	○	●	●	●	○	○	●	●	●

WECS II 2048 /DMX/02

The WECS II 2048 /DMX/02 is the new server for 2048 DMX/RDM channels with audio file. With the WECS II 2048-Server multimedia shows can be played synchronously to the music in a desired time schedule accurately to the second. The WECS II (Water Entertainment Control System) - transmits DMX/RDM data packets to the individual components (lights, DMX/RDM controllable nozzles etc.) which enable them to act accordingly.

WECS II 2048 /DMX/02

Product characteristics at a glance

- Showplayer with music output
- 2048 DMX/RDM channels, Modbus (up to 16 units), ArtNET
- 512 DMX input channels
- 2 x balanced audio outputs
- 1 x SMPTE input or output
- NetTimecode
- MTC (optional: additional interface required)
- RS232 and DVI
- 3 x USB 2.0
- Livepanel and I/O view
- Information window showing all important para-meters
- Master/slave function for several WECS II 2048 server
- Emergency function for backup systems
- E-mail function for all types of messages
- Intelligent logging system
- Automatic show update via internet
- Balance system for fountain height
- High flexibility
- Connection to different sensors (wind, water level etc.)
- Internal counter for all switching operations
- Automatic light control (ALC) specially for fountains

OASE WECS II Comparison

		WECS II 512 /DMX/02	WECS II 1024 /DMX/02	WECS II 2048 /DMX/02
Hardware	512 channel DMX/RDM output	•	•	•
	1024 channel DMX/RDM output	–	•	•
	2048 channel DMX/RDM output	–	–	•
	8 Digital output	•	•	–
	8 Digital input	•	•	–
	DIN Rail housing	•	•	–
	DIN 19" rack	–	–	•
	Audio output	–	•	•
Standalone	Standalone capable	•	•	•
	Micro SD-Card 4GB	•	•	–
	Solid state disc 60GB	–	–	•
	Calendar	•	•	•
Connectivity	Eternet RJ45 10/100 mbit	•	•	•
	Ethernet Artnet full support	–	–	•
	Ethernet Modbus / TCP/UDP built-in	–	–	•
	Midi time code in / out	–	–	•
	SMPTE time code input or output	–	–	•
	RS232-remote control	–	–	•
	DVI output	–	–	•
	USB 2.0	–	–	•
	SNTC, NTC (optional interface)	–	–	•
Software	Fixture library	•	•	•
	Patching	•	•	•
	Operating & Monitoring (Livepage)	•	•	•
	RDM monitoring	•	•	•
	Logbook files	•	•	•
	Scenes	•	•	•
	Sequences	•	•	•
	Scheduler	•	•	•
	DMX channel preview	•	•	•
	Effects: SIN, COS, RECT, SAW UP/-DOWN	•	•	•
	Matrix programming	•	•	•
	Media support audio	•	•	•
	Matrix special effects	•	•	•
	Scripts/Macros	•	•	•
	V:3D remote control over Artnet	–	–	•
	Parameter curves/Editable curves	–	–	•
	ALC (Automatic Light Control) fountains	–	–	•
	Media support laser, video, beamer	–	–	•
	Email function for messages	–	–	•

Power
Electrical control systems

WECS II 2048 /DMX/02

These components or devices in turn analyse the received data and send back their status signals like operating hours and temperature via the same cable. Remote diagnosis and remote maintenance of the connected components can be done with these status signals in combination with a PC. Up to 4 DMX universes (2048 DMX channels) can be controlled by one WECS II 2048 server and up to 32 servers can be operated jointly. This means that a maximum of 65536 DMX/RDM channels can be controlled at once. The WECS II 2048 can synchronize or be synchronized by other equipment via it's synchronization interface (SMPTE, NetTimecode, and MTC). Moreover, the device can also be controlled as a fixture by a DMX start address of a master control console. In addition a variety of simple text commands are also provided which are either transmitted via network or directly entered to the server.

Water Entertainment Control System	WECS II 2048 /DMX/02
Dimensions (L x W x H): [mm]	482 x 360 x 130
Weight: [kg]	12
Housing:	19" Rack front colour white/blue
Protection class:	IP20
PC Power supply:	100..240 V AC, max. 500 W
Operation temperature:	0..40°C / 0..80% humidity non condensed
Certification:	CE
Outputs:	4 x DMX/RDM (clamps, optically isolated), 2048 DMX channels 2 x balanced audio 2 x Graphic card (ext.Videobeamershow), 3 x USB2.0, Livepanel and I/O view Several time codes (SMPTE, SNTC, NTC, MTC (optional: additional Interface required) Art-Net and DMX/RDM Modbus (up to 16 units)
Inputs:	512 DMX input channels Sensor connection (wind, water level, etc.) Several time codes (SMPTE, SNTC, NTC, MTC (optional: additional Interface required)
Network:	2 x Ethernet RJ45 10/100Mbit / incl. team-viewer software (remote control)
Memory:	Solid state drive 60GB
Operation:	4 x 40 Segment LCD Display with 5 keys
Special:	Master/Slave function for grouping WECS 2048 II server Intelligent Logging system Solar calculation for automatic light control Automatic Light Control (ALC) specially for fountains Balance system for fountain height Automatic show update via internet
In the scope of delivery	
Hardware	
System Documentation	
Order no.	56507

Software licenses for animation and show programming

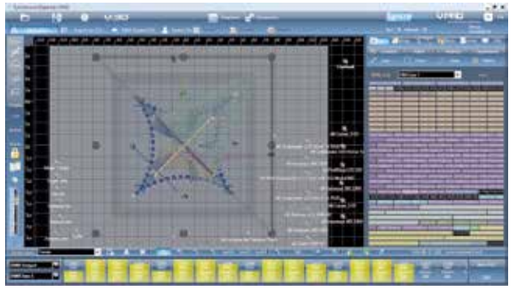

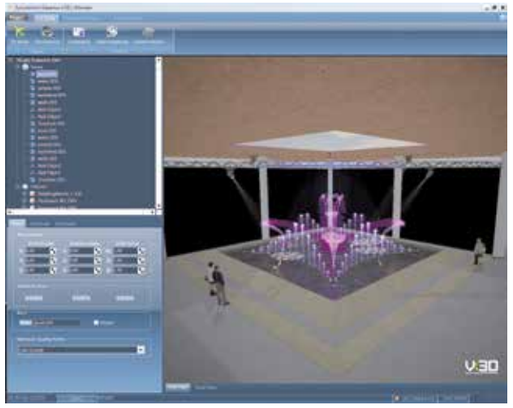

Scope of Delivery	Syncronorm Depence **Animator**	Syncronorm Depence **Architect**	Syncronorm Depence **Professional**	Syncronorm Depence **Ultimate**
	Visualization system only for presentation animations, videorendering and distribution	Show control and realtime simulation system for all multimedia fountain	Professional control and simulation system for all multimedia fountain	Professional control and simulation system for all multimedia fountains
Realtime simulation of water fountains	unlimited	1500	unlimited	unlimited
Stage lighting fixtures (Scanner, Movingheads)	•	•	•	•
Buildings and environment in 3D	•	•	•	•
Videorendering	•	•	•	•
Simulate laser and video projectors	•	•	•	•
Realtime laser data input	•	•	•	•
Number of DMX-Output channels	–	4096	8192	24576
Number of DMX-Input channels	–	4096	8192	24576
Ehternet ModBus	–	•	•	•
WECS II 2048-Server	–	•	•	•
V: 3D remote control over ArtNET input	–	–	•	•
Timecode synchronize (SMPTE, NTC, SNTC)	–	•	•	•
V: PAD direct ArtNET Input/Output	–	–	•	•
Full RDM Support	–	•	•	•
Record old Shows	–	–	•	•
Create and Manage CPS User groups	–	–	–	•
Training cost	on request			
Scope of delivery	DVD Jewel Case, USB Safety-Dongle, Productdocumentation / Datasheet			
Recommended system requirements	• Microsoft® Windows™ 7 / 32 oder 64 bit / Intel i7 CPU / 6 GB RAM • NVidia Geforce® GTX580 or higher • 1920 x 1080 display resolution • 5 GB disc space			
Product Description / Product Name	Software	Software	Software	Software
Order no.	58976	58976	58976	58976

Power
Electrical control systems

	Fresh Water	Pool Water	Sea Water	220-240 V	400 V	110-120 V	50 Hz	60 Hz	12 V AC	24 V DC	DMX	DMX/ RDM	Plug and Spray
Electronic water level control				●		●	●	●					
Solenoid valve	●									●			

Electronic water level control 1, 2 and Solenoid valves ½" 24 V, 1" 24 V

The water-level regulator can be used for electronic water-level monitoring, and consequently for automatic top-up infeed of pool water, but it can also be used to switch off pump systems in the event of dry run.

Product characteristics at a glance

- Electronically monitoring of water level
- Automatic top-up infeed of pool water
- Automatic switch off of pump technology when using water-level sensors incl. dry-run protection electrode

OASE solenoid valves to top-up pool water are installed in the fresh water infeed line of a pool system or in a water reservoir.

Product characteristics at a glance

- For automatic regulation of the water level

Electronic water level control 1

Electronic water level control 2

Solenoid valve ½" 24 V

Solenoid valve 1" 24 V

The water-level control device essentially consists of an electronic water-level regulator, a water-level sensor, and a solenoid valve. Depending on the area of implementation individual components are available in different models.

In automatic mode, and if there is an empty pool, the solenoid valve in the fresh water in feed line opens and the water flows until it reaches the maximum electrode. As soon as the maximum electrode is reached a non-hazardous control current flows between the maximum electrode and the common electrode. This switches the solenoid valve off and water infeed is interrupted. If the water level drops to a level where the minimum electrode is no longer covered with water, the control current will be interrupted. The solenoid valve opens and allows water to flow until the water level has reached the maximum electrode and the control current flows again.

For greater reliability and safety there are only 24-Volt models.

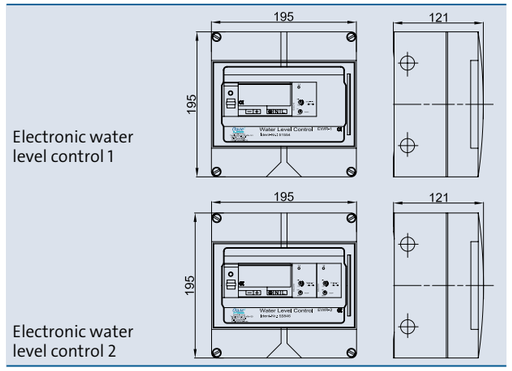

		Electronic water level control 1	Electronic water level control 2
Dimensions (L x W x H)	[mm]	180 x 180 x 124	180 x 180 x 124
Housing		plastic	plastic
Protection class		IP 54	IP 54
Voltage	[V/Hz]	100–240 / 50–60	100–240 / 50–60
Solenoid valve	[V/Hz]	230/50	230/50
	[A]	5.0	5,0
Solenoid valve	[V/DC]	24	24
	[A]	0,5	0.5
Pump	[V/Hz]	230/50	230/50
	[A]	5.0	5.0
Switch/Button		1	1
Indicator lights		1	1
Connections for electrodes		3	4
Dry-run protection		no	yes
Alarm monitoring		no	yes
Weight	[kg]	2.1	2.1
Order no.		51554	55846

		Solenoid valve ½" 24 V	Solenoid valve 1" 24 V
Dimensions (L x W x H)	[mm]	67 x 45 x 88	96 x 70 x 108
Function		normally closed	normally closed
Nominal diameter	[inch]	½	1
Directions		2/2	2/2
Voltage	[V/DC]	24	24
Duty cycle		100 %	100 %
Protection class		IP 65	IP 65
Pressure range	[bar]	0.3 - 1.6	0.3 - 1.6
Material		brass	brass
Weight	[kg]	0.5	1.3
Order no.		51556	51557

Power
Water level regulators / solenoid valves

	Fresh Water	Pool Water	Sea Water	220-240 V	400 V	110-120 V	50 Hz	60 Hz	12 V AC	24 V DC	DMX	DMX/ RDM	Plug and Spray
Water-Level Sensor	●	●	○	○	○	○	○	○	○	○	○	○	○
Supplemental electrode	●	●	○	○	○	○	○	○	○	○	○	○	○

Water-Level Sensors 20-3, 20-4 and 2000-3/5

OASE water-level sensors ensure reliable control of the water level and thus prevent the pool from overflowing.

The Water-Level Sensor 2000-3/5 is designed for greater level differences of approximately 50 to 2000 mm, such as occur in water reservoirs.

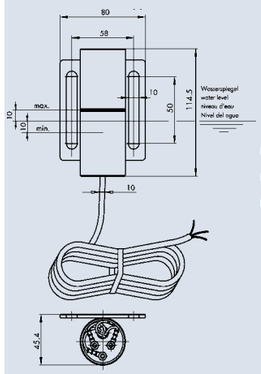

Water-Level Sensor 20-3 Water-Level Sensor 20-4

Water-Level Sensor 20-3

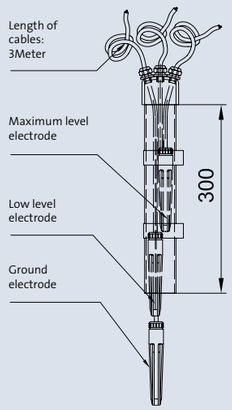

Water-Level Sensor 2000-3/5

Supplemental electrode 2000-1

Water-Level Sensor 2000-3/5

The stainless steel housings of the Water-Level Sensor 20-3 and 20-4 also take on the function of the common electrode. The minimum and maximum electrodes are in the housing. The permanently set level difference is 20 mm. In addition the 20-4 has a dry-run protection electrode.

It can be retrofitted with a dry run protection electrode. The electrodes can be adjusted according to the level differences via the cable length. They give switch on and switch off commands to regulate the water level or to protect the pump technology (Supplemental electrode 2000-1).

Product characteristics at a glance

- For automatic infeed and top-up feed of freshwater if the water level drops
- With dry-run protection and alarm function
- Compensates different water levels
- Robust and reliable technology
- Safe operation

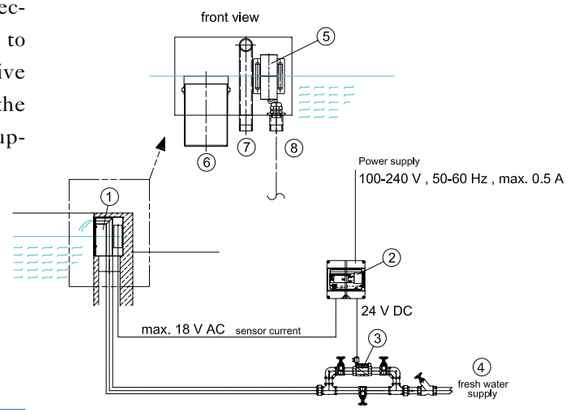

① 51120 Overfl. wall-inst. comb. armature 100 E
② 51554 Electronic water level control 1
③ 51557 Solenoid valve 1" 24 V
④ fresh water supply
⑤ 51559 Water level sensor WSS 20-3
⑥ overflow pipe
⑦ fresh water inlet in fountain pool
⑧ protective pipe for water level sensor cable

Accessories (must be ordered separately)

Electronic water level control 1 (see page 216)	51554
Electronic water level control 2 (see page 216)	55846
Solenoid valve ½ 24 V (see page 216)	51556
Solenoid valve 1 24 V (see page 216)	51557

		Water-Level Sensor 20-3	Water-Level Sensor 20-4
Dimensions (L x W x H)	[mm]	115 x 80 x 46	115 x 80 x 46
Housing		Stainless steel	Stainless steel
Protection class		IP 68	IP 68
Electrodes	[pieces]	3	4
Common	[pieces]	1	1
Minimum	[pieces]	1	1
Maximum	[pieces]	1	1
Dry-run	[pieces]	-	1
Level difference	[mm]	20	20
Cable length	[m]	10.0	10.0
Weight	[kg]	2.2	2.3
Order no.		**51559**	**53918**

		Water-Level Sensor 2000-3/5	Supplemental electrode 2000 -1
Dimensions (L x W x H)	[mm]	315 x 135 x 150	150 x 125 x 75
Housing		plastic	plastic
Protection class		IP 68	IP 68
Electrodes	[pieces]	3	1
Common	[pieces]	1	-
Minimum	[pieces]	1	-
Maximum	[pieces]	1	-
Dry-run	[pieces]	-	1
Level difference	[mm]	max. 2500	max. 2500
Cable length	[m]	3.0	3.0
Weight	[kg]	2.5	0.3
Order no.		**55845**	**55843**

	Fresh Water	Pool Water	Sea Water	220-240 V	400 V	110-120 V	50 Hz	60 Hz	12 V AC	24 V DC	DMX	DMX/ RDM	Plug and Spray
Wind-dependent fountain control	○	○	○	○	○	○	○	○	○	●	○	○	○
Anemometer	○	○	○	●	○	●	●	●	○	○	○	○	○

Wind-dependent fountain control and Anemometer

During stormy weather, fountains often have an inharmonious effect and normal fountain operation will get the surrounding area wet. Wind-level fountain controls can reduce the fountain height, or completely switch the system off, depending on wind speed.

Product characteristics at a glance

- Wind-dependent switch-off in 3 stages
- Saves water and power costs
- Weather-dependent harmonious water pattern
- No irritated pedestrians
- Anemometer with wind direction indication on request

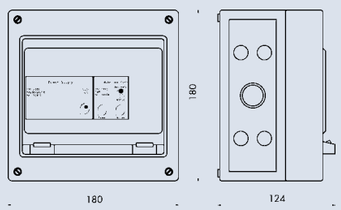

Wind-dependent fountain control 3 K

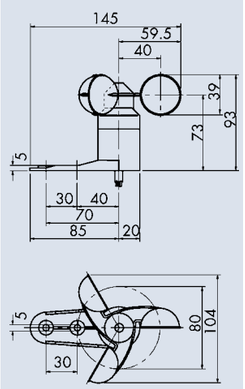

Anemometer K

The Wind-dependent fountain control 3K control device directly switches off the pump at a certain preset wind level. If multiple pumps are operated that feed one fountain, they can be switched off one after the other. Or two bypass valves are opened depending on the wind and the pump is switched off only in the third step.

The control device is usually placed next to the control cabinet of the fountain system. The control cables of the pumps are routed out of the control cabinet and connected. Wind conditions on the anemometer and on the fountains should be identical if possible, consequently the anemometer should be slightly elevated and mounted on a mast or a roof in the vicinity of the fountain. The pulse lines of the anemometer should be shielded and routed to the control device via the shortest path possible.
(Maximum possible cable length is 250 m)

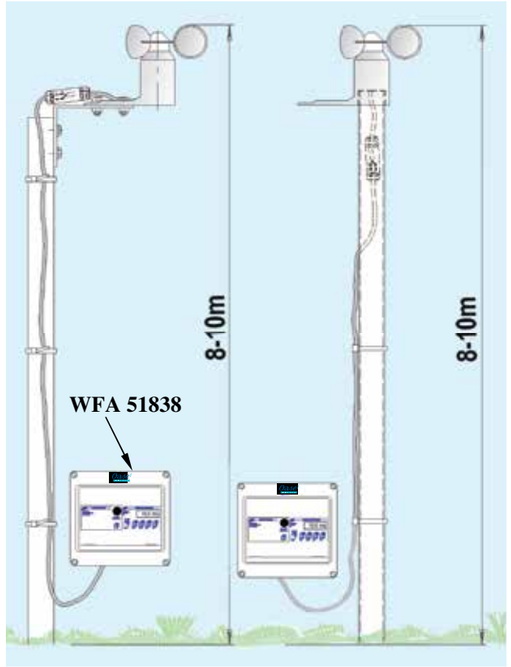

Cable: starting from 20m cable length, please use shielded cable

Possible fountain heights in %

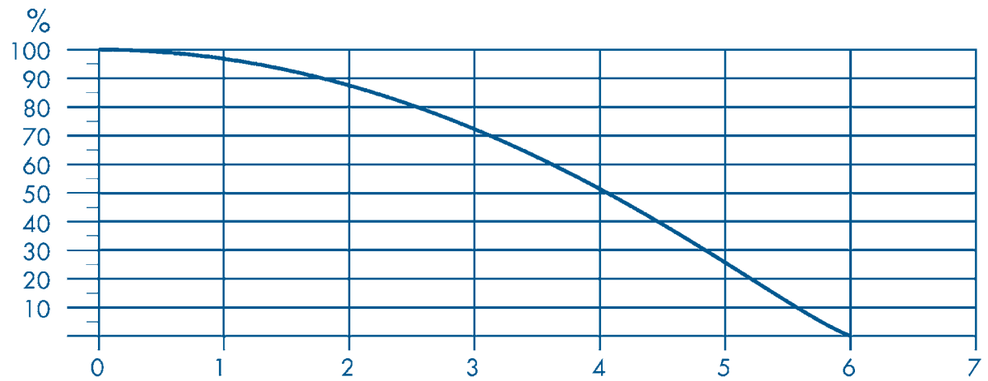

Wind forces from 0 – 6 according to the Beaufort wind force scale

		Wind-dependent fountain control 3K	Anemometer K
Dimensions (L x W x H)	[mm]	180 x 180 x 124	145 x 104 x 93
Housing		plastic	plastic
Protection class		IP 54	IP 33
Voltage	[V / Hz]	230 / 50	24 V / DC
Switch/button		5	–
Indicator light		1	–
Control lines		3	–
Contact load	[A]	5	–
Weight	[kg]	2.2	0.8
Order no.		**51838**	**53913**

Power
Wind level fountain controller

	Fresh Water	Pool Water	Sea Water	220-240 V	400 V	110-120 V	50 Hz	60 Hz	12 V AC	24 V DC	DMX	DMX/ RDM	Plug and Spray
Transformer UST 150 /01	●	●	○	●	○	○	●	○	●	○	○	○	●
Transformer UST 150 /A/01	●	●	○	○	○	●	○	●	●	○	○	○	●

Underwater transformer UST 150 /01, 150 /A/01

The Underwater Power Supply and the underwater transformer have the protection class IP 68 and are equipped with 4 slots.

Through this special connection technology, wiring by hand is no longer necessary.

Product characteristics at a glance

- 12V AC Power Supply for underwater
- Fixing by 4 screw possible
- 4 x female 12 V AC OASE connector
- IP 68 rated
- With patented underwater connection technology

Underwater transformer UST 150 /01 and 150 /A/01

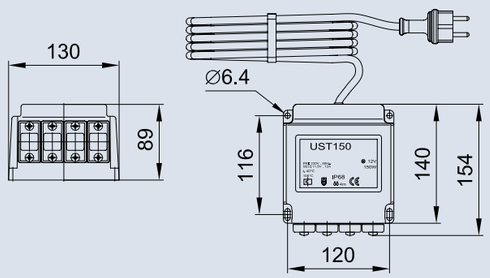

Underwater transformer UST 150 /01

Accessories (must be ordered separately)

Connecting cable 12 V AC /01 (see page 192)	Order no.
Connecting cable 12 V AC / 1.0 m /01	12768
Connecting cable 12 V AC / 3.0 m /01	12374
Connecting cable 12 V AC / 7.5 m /01	12375
Connecting cable 12 V AC / 15.0 m /01	11740

Underwater transformer		UST 150 /01		150 /A/01
Dimensions (L x W x H)	[mm]	154 x 130 x 89	[inch]	6 x 5.1 x 3.5
Primary voltage	[V/Hz]	230/50	[V/Hz]	120/60
Secondary voltage	[V]	12	[V]	12
Consumption	[VA]	150	[VA]	150
Cable length	[m]	10	[ft]	20
Weight	[kg]	4.5	[lbs]	9.9
Order no.		50401		50517

Please follow the international and local norm

Accessories

Power supply 85/265V AC/24 V DC 48W/2A

1-phase switched-mode power supply in installation housing in performance classes 24 and 48 W. The INSTA power units can be universally deployed because of their wide input range from 85 V AC to 265 V AC.
Available with output voltages from 5 V to 48 V

Product characteristics at a glance

- 24 V / DC / 2 A
- 48 W Power
- Input 1-phrase
- Input voltage range85 - 264 V/AC
- Connection (assembly part) screw terminals

Order no. 43524

DMX/RDM Booster / Splitter 1-4

Universal bidirectional DMX/RDM Booster/Splitter 1 -> 4 (1 x Input, 4 x DMX outputs, individually optically isolated / potential free).
Signal booster to extend the DMX line, ideal for the creation of branches and for separation, signal branching and to increase electrical safety.
Unit for DIN rail mounting, 230 V AC. DMX/RDM compatible

Product characteristics at a glance

- DMX SPLITTER / BOOSTER
- 1 DMX UNIVERSE, 4+1 outputs
- Compatibility: DMX512/1990, ANSI E1-11 DMX512A, DMX to DIN56930-2, ANSI E1-20 DMX/RDM
- Cage clamp connectors (Input, DMX THRU and 4 opto-isolated outputs)
- Wide range Power Supply: 85...230V AC, approx. 4W
- Dimensions: DIN rail, width 6,5U

Order no. 11702

WECS LTE-Router

The LTE-router is a machine-to-machine (M2M) industrial cellular router with Din-rail mounting, which works on 2G, 3G and 4G cellular networks, provides reliable and robust wireless connections. The 4G LTE router has two Ethernet ports and two SMA(f) cellular antenna connectors. The LTE router also supports the OpenVPN and IPSec providing high-grade network security.

The VPN LTE-router is designed to endure extreme conditions, such as temperatures ranging from -25 °C - +70 °C and low power consumption.

Scope of supply:

- WECS LTE router
- TK – PSU
- Antenna with 5 m cable

Order no. 43872

Water quality

Water quality is the basis for long-lasting technology. Various factors play a role in this regard. Fish, falling leaves or waterfowl cause increased algae growth and more silt formation. In addition, there are regional influences. OASE draws on the knowledge and experience of countless project implementations all around the world – with different local conditions and challenges. The proven products from OASE use the regenerative forces of nature. They biodegrade excess nutrients and contaminants.

WATER QUALITY

228 Aerators
232 Sand filter
234 Skimmers
236 Clear Fountain System
238 Water treatment
241 Water analysis

New products

Water Quality
| Dosing stations

Page 236 **Clear Fountain System II**

Water Quality
Dosing stations

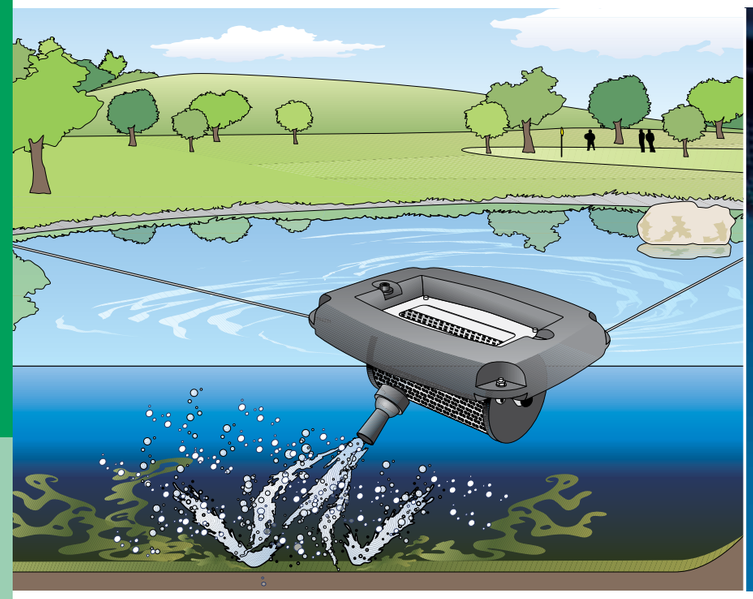

	Fresh Water	Pool Water	Sea Water	220-240 V	400 V	110-120 V	50 Hz	60 Hz	12 V AC	24 V DC	DMX	DMX/ RDM	Plug and Spray
AquaAir 250	●	○	○	●	○	○	●	○	○	○	○	○	○

AquaAir 250

Oxygen plays a crucial role in breaking down nutrients in water. Many of the problems associated with an artificial lake or pond, such as algae infestation, silt or odour nuisance can be attributed to oxygen deficits. Missing oxygen can be fed into the body of water through specific water movement that introduces air. This stabilises a body of water's biological power of regeneration and results in optimal quality of the artificial lake or pond.

Product characteristics at a glance

- Suitable for pond surfaces up to 250 m²
- Adjustable injector nozzle for optimal oxygen input with depth penetration to 4 m
- High turnover rate bring standing water into life
- Extremely long service life thanks to high-quality workmanship and stainless steel elements
- Low noise underwater operation
- Fastening material included in the scope of delivery
- Optimal oxygen supply thanks to small bubbles

Ideal supplement to this product is **AquaActiv SediFree**.
For more product information please see page 240.

AquaAir 250

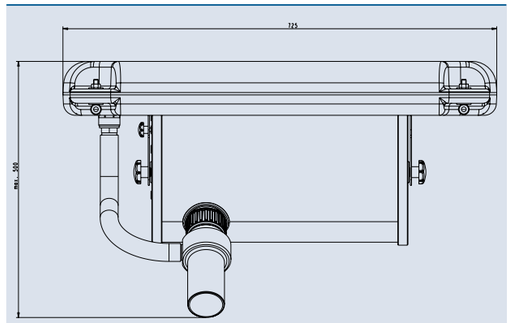

AquaAir 250

Injector nozzle
Adjustable injector nozzle for focussed oxygen input to aerate the pond.

Professional oxygen supply
Powerful pump with professional Venturi principle enables optimal oxygen supply in small bubbles.

Stainless steel basket
High quality design with corrosion-resistant filter basket and suspension element.

Fastening material
Easy and secure anchoring of the aerator thanks to the fastening material included in the scope of delivery.
(2 x 20 m, 3 mm thick)

Before: Standing water with excessive algae formation

After: Uniform oxygen enrichment plus circulation

The Aqua Air 250 is a floating aerator that provides an adequate supply of oxygen for bodies of water up to 250,000 litre. A pump supplies the air/water mixture to the artificial pond or lake via the venturi principle. The high volume flow guarantees air supply in the entire body of water through strong flow movements.

Deep zones as well as shallow water zones can be optimally supplied with oxygen through the adjustable angle of the flow injector.

AquaAir		250
Dimensions (L x W x H)	[mm]	725 x 555 x 310
Rated voltage	[V/Hz]	230 / 50
Power consumption (Pump)	[W]	650
Flow rate max.	[l/h]	30000
Air displacement quantity	[l/h]	ca. 8500
Radiation depth	[m*]	up to 4.0
Filter surface intake	[cm²]	ca. 3000
For bodies of water to max.	[m³]	250
Minimum water depth	[m]	0.5
Cable length	[m]	30.0
Weight	[kg]	28.0
Order no.		57479

* Depends on the jet angle set

Water Quality
Pond Aerators

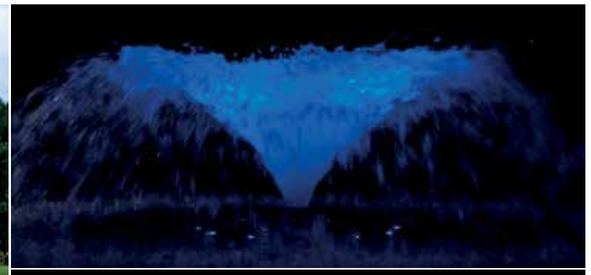

	Fresh Water	Pool Water	Sea Water	220-240 V	400 V	110-120 V	50 Hz	60 Hz	12 V AC	24 V DC	DMX	DMX/ RDM	Plug and Spray
AirFlo 1.5 kW	●	○	○	●	○	○	●	○	○	○	○	○	●
AirFlo 4.0 kW	●	○	○	○	●	○	●	○	○	○	○	○	●

AirFlo 1.5 kW/4.0 kW

AirFlo sets new standards in the field of lake aeration and decoration: The axial propeller technology ensures impressive and unequalled water flow rates of up to 295,000 l/h – for an optimal supply of oxygen to the lake.

Product characteristics at a glance

- Floating aerator for oxygen supply through powerful water patterns for water surfaces up to 15,000 m²
- Axial propeller technology for water flow rates up to 295,000 l/h
- Maximum oxygen supply for the body of water
- Easy installation and maintenance through bayonet technology
- Foamed float for extraordinary stability and noise reduction
- Pump basket of corrosion resistant stainless steel
- Included in the scope of delivery: Fastening set, 3 -part nozzle attachement for 3 different types of water pattern “Trumpet”
- Lighting sets with stainless steel holder available as an accessory

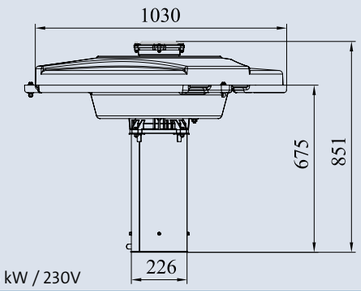

AirFlo 1.5 kW / 230V

AirFlo

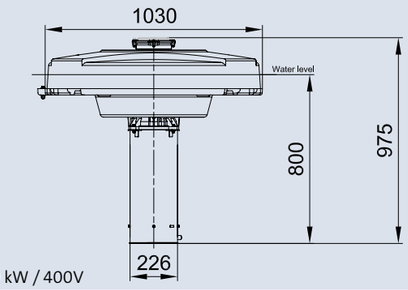

AirFlo 4.0 kW / 400V

Bayonet technology
For easy mounting.

Fastening material
Easy and secure anchoring of the aerator thanks to the fastening material included in the scope of delivery.
(3 x 30 m, 3 mm thick)

Earthing pin plug + control box
The 230 V version is delivered ready to operate with control box.

CEE-connector + protection switch
The 400 V version comes with a ready to connect, 5 pole CEE connector and motor protection switch.

	Water pattern »Trumpet« M	Water pattern »Trumpet« L	Water pattern »Trumpet« XL
Power data of the 3 »Trumpet« type AirFlo water patterns (included in the scope of delivery)	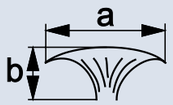	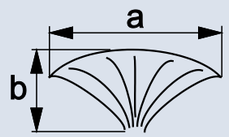	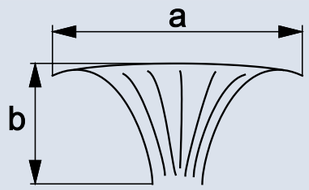

	Water pattern »Trumpet« M		Water pattern »Trumpet« L		Water pattern »Trumpet« XL	
	Fountain height x width*1 (b x a)	Flow rate	Fountain height x width*1 (b x a)	Flow rate	Fountain height x width*1 (b x a)	Flow rate
	[m]	[l/h]	[m]	[l/h]	[m]	[l/h]
AirFlo 1.5 kW / 230 V	0.6 x 2.5	165000	0.95 x 4	155000	1.8 x 6	120000
AirFlo 4.0 kW / 400 V	1.5 x 6.0	295000	2.0 x 8.0	265000	3 x 10	225000

*1 Guide values

Accessories (must be ordered separately)

	Order no.
LED-floating fountain illumination RGB (see page 114)	42641
LED-floating fountain illumination white (see page 114)	42637

		AirFlo 1.5 kW / 230V	AirFlo 4.0 kW / 400V
Dimensions (ø x H)	[mm]	1090 x 700	1090 x 980
Nominal voltage	[V/Hz]	230/50	400/50
Pump power	[kW]	1.5	4.0
Nominal current	[A]	10.2	9.6
Minimum water depth	[m]	0.90	1.15
Minimum lake size	[m²]	100	500
Opt. effect for lakes up to	[m²]	5000	15000
Suction depth max.	[m]	4.0	5.0
Cable length	[m]	50.0	50.0
Weight	[kg]	ca. 40.0	ca. 60.0
Order no.		**50183**	**50185**

	Fresh Water	Pool Water	Sea Water	220-240 V	400 V	110-120 V	50 Hz	60 Hz	12 V AC	24 V DC	DMX	DMX/ RDM	Plug and Spray
Sandfilter D 600	●	●	○	●	○	○	●	○	○	○	○	○	○
Sandfilter D 800	●	●	○	●	○	○	●	○	○	○	○	○	○
Backwash Automatic Eurotronik	●	●	○	●	○	○	●	○	○	○	○	○	○

Sandfilter D 600 / D 800

Efficient water filtration significantly extends the interval between necessary cleaning tasks in spray fountains, ponds, and other systems.

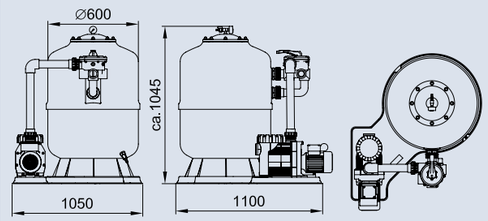

Sandfilter D600

Sandfilter D600

Product characteristics at a glance

- Efficient, mechanical water filtration
- Extends the cleaning interval
- Environmentally-friendly mechanical filtration
- Pre-assembled, easy-to install unit comprised of filter, pump, and multi-port valve
- Easy to clean

Accessories (must be ordered separately)

Backwash Automatic Eurotronic

- For automatic backwash

Backwash Automatic Eurotronic		
Dimensions (LxWxH)	[mm]	245 x 140 x 95
Power Supply	[V/Hz]	230/50
Power consumption of the controller	[VA]	approx. 10
Breaking capacity	[kW]	max. 1.1
Motor-operated valve	[V]	230
Order no.		55351

Crystal quartz sand	25 kg sack
Grain size	0.4 - 0.8 mm
Order no.	53428

AFM filter medium	21 kg sack
The activated filter material comes with catalytic and oxidizing characteristics. Resists biofilm accumulation and enhances the service interval.	
Grain	0.5 - 1.0 mm
Order no.	50433

The crystal quartz sand filter should be operated independently of and parallel to actual spray fountain and circulation technology. The filter can work during fountain operation, in periods when the fountain is not operating, or it can even work around the clock.

The filter system consists of a container made of fibre-glass reinforced plastic and a pump and a multi-port valve. Everything is compact and pre-mounted on a plastic pallet. The fill opening of the filter tank is sealed with a cover and an integrated manometer. The tank can be filled with crystal quartz sand or AFM filter medium and contaminated water is suctioned in by the pump. In the filter the water is forced through the filter material via an upper distributor with sieve and then it is fed back into the pool through a lower distributor with small open-seam pipe. If the filter capacity is exhausted the filter is simply rinsed in reverse and the debris is discharged via the wastewater channel.

Table with guide values for filter runtime control / maximum pool water contents at filter runtimes of:

Sandfilter		D 600	D 800
At low contamination level			
Recirculations / day		2	2
9 hours / day	[m³]	50	120
15 hours / day	[m³]	70	200
24 hours / day	[m³]	120	300
At medium level of contamination			
Recirculations / day		4	4
9 hours / day	[m³]	30	60
15 hours / day	[m³]	45	100
24 hours / day	[m³]	60	150
At high level of contamination			
Recirculations / day		6	6
9 hours / day	[m³]	20	40
15 hours / day	[m³]	35	60
24 hours / day	[m³]	50	100

Sandfilter		D 600	D 800
Dimensions (LxWxH)	[mm]	1000 x 870 x 1100	1000 x 1000 x 1250
Filter tank with base & lid			
Filter tank diameter	[mm]	630	830
Filter surface	[m²]	0.28	0.50
Recirculation capacity at 8 m wc	[m³/h]	13	25
Filter speed at 8 m wc	[m/h]	50	50
Reverse rinse speed	[m/h]	50	50
Reverse rinse duration	[min.]	ca. 2 - 4	ca. 2 - 4
Water requirement per reverse rinse	[l]	approx. 650 in 3 min.	approx. 1250 in 3 min.
Grain of the filter material	[mm]	0.4 - 1.0	0.4 - 1.0
Quantity of the filter material	[kg]	approx. 125	approx. 325
Max. operating temperature	[°C]	40	40
Max. operating pressure	[bar]	2.5	2.5
Suction line connection	[inch]	2	2
Pressure line connection	[inch]	1 ½	2
Back wash connection	[inch]	1 ½	2
Nominal motor power	[kW]	0.65	1.3
Motor power consumption	[kW]	0.97	1.85
Nominal motor voltage	[V/Hz]	230/50	230/50
Nominal motor current	[A]	4.7	8.3
Motor protection class		IP x 4	IP x 4
Weight without sand	[kg]	40.0	72.0
Filter tank material		GFK (Polyester)	GFK (Polyester)
Pump material		PP TV 20/PP TV 40	PP GF 30/PP TV 40
Order no.		50431	50432

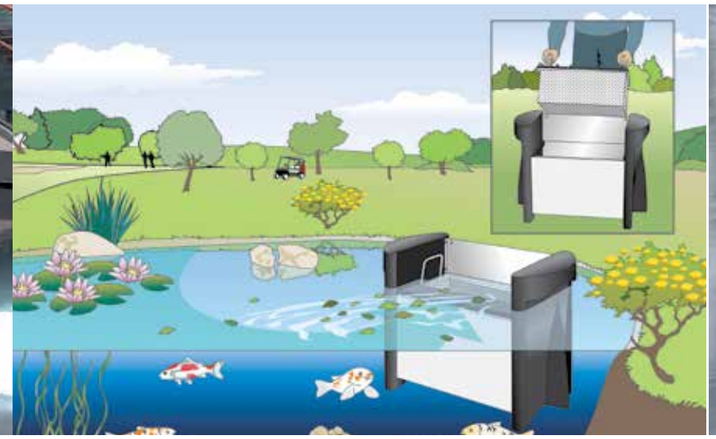

	Fresh Water	Pool Water	Sea Water	220-240 V	400 V	110-120 V	50 Hz	60 Hz	12 V AC	24 V DC	DMX	DMX/ RDM	Plug and Spray
Wall Skimmer	●	●	○	○	○	○	○	○	○	○	○	○	○

Wall Skimmer

OASE stainless steel skimmers serve to suck in dirt particles floating on the water surface.

Product characteristics at a glance

- Skimmer housing made of high-grade stainless steel
- High performance of dirt straining
- Dirt strainer basket easily to be taken out

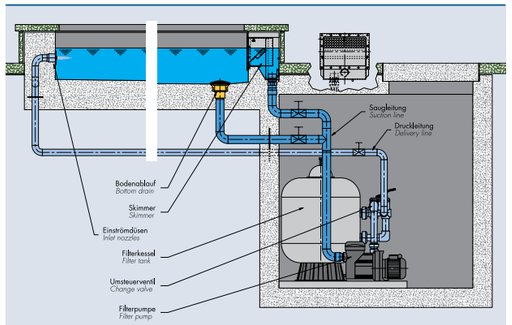

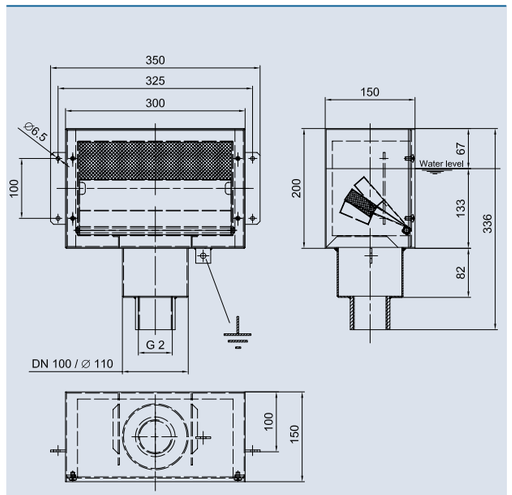

Wall Skimmer

Wall Skimmer

Accessories (must be ordered separately)

Concrete part 100 T (see page 247)	57467
Debris sieve 100 E (see page 247)	51974
Concrete part 70 T (see page 247)	57471
Debris sieve 70 E (see page 247)	51973
Inflow nozzle 15 E (see page 252)	53086
Floor/wall transition 15-175 E (see page 252)	51142
Suction filter basket 200/100/15 E (see page 256)	51082

Wall Skimmer		
Dimensions (L x W x H)	[mm]	350 x 150 x 336
Connection		DN 100/2"
Material		Stailess steel
Weight	[kg]	5.10
Order no.		**54921**

	Fresh Water	Pool Water	Sea Water	220-240 V	400 V	110-120 V	50 Hz	60 Hz	12 V AC	24 V DC	DMX	DMX/ RDM	Plug and Spray
Skimmer 250	●	○	○	●	○	○	●	○	○	○	○	○	○

Skimmer 250

Skimmer 250 is a high-performance floating skimmer that keeps up to 250 m² of surface water clean. The floating skimmer is particularly well suited for bodies of water with significant water level fluctuation, and it can be flexibly implemented where pollutants accumulate.

Product characteristics at a glance

- **Powerful suction cleaning of pond surfaces up to 250 m²**
- **Optimal adaptation to water level differences**
- **Special large inlet and powerful suction capacity for first-class skimming results**
- **Extremely long service life thanks to high-quality workmanship and stainless steel elements**
- **Large, 27 litre stainless steel pollutant collection basket**
- **Fastening material included in the scope of delivery**

Skimmer 250

Skimmer 250		
Dimensions (L x W x H)	[mm]	775 x 400 x 590
Skimmer opening width	[mm]	520
Basket size (L x W x H)	[mm]	510 x 310 x 190
Filter basket volume	[l]	27
Rated voltage	[V/Hz]	220 - 240 / 50
Power consumption (pump)	[W]	250
Litre per minute max.	[l/min]	250
Litre per hour max.	[l/h]	15000
Pressure-side connection	[inch]	1 ½
Filter surface	[cm²]	4500
Suitable for ponds up to	[m²]	250
Minimum water depth	[mm]	650
Weight	[kg]	31
Cable length	[m]	10
Order no.		**57480**

	Fresh Water	Pool Water	Sea Water	220-240 V	400 V	110-120 V	50 Hz	60 Hz	12 V AC	24 V DC	DMX	DMX/ RDM	Plug and Spray
Clear Fountain System II	●	●	○	●	○	○	●	●	○	○	○	○	○

Clear Fountain System II

Spray fountain technology requires optimal water conditions: Ideal pH value, no algae and no germs are the basic prerequisites. We use proven means to achieve this end. OASE has developed a special product range of measuring and dosing equipment and accessories for trouble-free treatment.

Clear Fountain System

- Simple, reliable system with dosing pumps and control instruments.
- Password protected programming with user-friendly display and console.

Product characteristics at a glance

- Visually and technically clean water
- Perfectly matched system components
- High-quality components from a single source
- Easy to handle

Clear Fountain System II

Clear Fountain System II

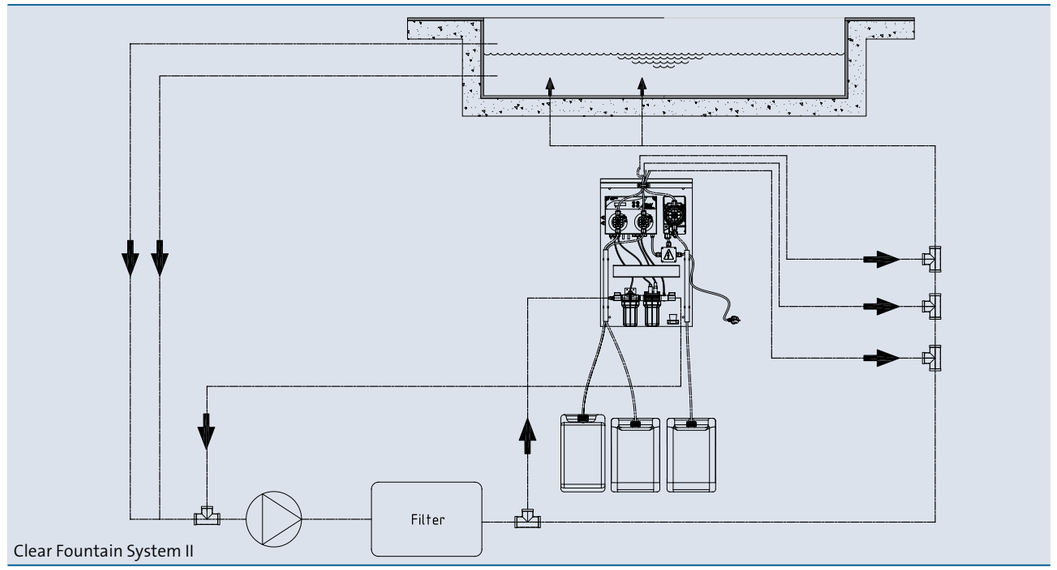

Clear Fountain System II

Accessories (must be ordered separately)

Other accessories such as; suction lances and collectors on request.

Buffer solution calibration set	
Order no.	51036

Sonde Ph	
Order no.	51034

Sonde Redox	
Order no.	51035

	Clear Fountain System II	PH-value regulator 51	OxyPool	AlGo Fountain
	Clear Fountain System II	PH-value regulator 51	OxyPool	AlGo Fountain
Description:	Compact dosing station Scope of delivery - Dosing station with mounting panel - 1 x Sonde PH, 1 x Sonde Redox - Buffer solution calibration set	pH-value regulator for reducing the pH-value	- Efficient water cleaner with the active ingredient hydrogen peroxide 9.9 % and silver ions - Eliminates algae and acts against bacteria and fungus - Suitable for ornamental ponds, swim ponds, spray fountains and water features	- Fast help against algae, odours and slippery coverings - Prevents calcium deposits - Compatible with surfaces and technology - Long-lasting effect
Dimensions (L x W x H) [mm]	900 x 300 x 500	297 x 260 x 419	260 x 300 x 400	194 x 168 x 228
Voltage [V/Hz]	100-240/50-60	–	–	–
Power consumption [W]	56	–	–	–
Container size [l]	–	25.0	20.0	5.0
Weight [kg]	16.0	35.0	25.0	6.8
Order no.	57854	48394	51062	40234

* Utilise algicides safely. Always read the instructions and identifications before applying algicides.

AquaActiv – Sustainable clear living water

AquaActiv is an effective treatment against factors like excessive fish stock, rainfall, too much sunlight or leaves, which are frequently burden the sensitive pond biology. Moreover it restores the biological balance in the body of water. You can help your body of water to help itself.

The AquaActiv A-B-C concept with its 3-Step plan shows you a biologically sensible approach to an algae-free pond.

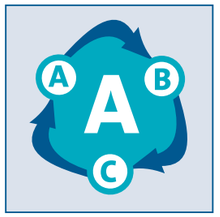

Improving water quality:

Usually algae growth occurs due to a shift in the biological balance.

Products of step A stabilize water in case of algae growth.

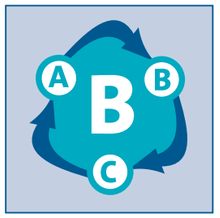

Binding nutrients:

Too much lively nutrient input can cause, that all the nutrients can no longer be adequately decomposed through natural decomposition processes.

Products of step B binds nutrients, to remain algae growth restricted to a minimum level, so that use of pesticides can be omitted.

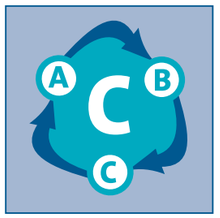

Controlling algae:

If water stabilization and nutrient limitation do not succeed in containing algae growth, with AlGo products the right helpers are on hand.

Products of step C help to control algae.

Step A		AquaActiv OptiPond 5 l
Improving water quality		**Basis for water stabilisatione** • Stabilizes carbonate hardness and total hardness • Properly treats soft well water or rain water for the species • Generates a balance of trace elements, such as sodium, potassium, calcium or magnesium • Helps eliminate acute ammonium and ammonia problems
	Container size	5 l
	Suitable for ponds up to max. [m³]	50.0
	Order no.	**50558**

Step B		AquaActiv PhosLess Direct 5 l
Binding nutrients		**Protection against algae production** • Withdraws phosphate from the water physically, so that algae infestations can be prevented • Binds hydrogen suplphides that can cause unpleasant odors • 100 ml binds up to 80 g of phosphates
	Container size	5 l
	Suitable for ponds up to max. [m³]	100.0
	Suitable for ponds with fish stock [m³]	100.0
	Order no.	**51287**

Step C		AquaActiv AlGo Universal 5 l*
Controlling algae		**Particulary effective against suspended algae** • Safely effective against the most frequently occurring algae types, such as string algae or brown algae • Inhibits algal metabolism • Reduces new algae formation • Develops its effects over the course of 2 to 3 weeks • If used as intended it is well-tolerated by plants and animals in the pond
	Container size	5 l
	Suitable for ponds up to max. [m³]	100.0
	Item no. (GB-Version)	Not available in GB
	Order no.	**50545**

*Use biocides carefully. Always read the label and product information before use!

Step C			AquaActiv AlGo Direct 5 l*
Controlling algae			**Effective algae control** • Works through direct contact • Ideal for locally limited infestation • Active ingredient also suitable for swim ponds • Safe applications requires a carbonate hardness of at least 3°dKH (KH quick test included)
	Container size		5 l
	Suitable for ponds up to max.	[m³]	100.0
	Item no. (GB-Version)		Not available in GB
	Order no.		**50549**
			AquaActiv PondClear 5 l*
			Creates crystal clear water • Effective against fine, non-filterable pollutants • Mineral particles from decaying organic material are flocculated • Removes toxic heavy metal and phosphates • Safe applications requires a carbonate hardness of at least 3°dKH (KH quick test included)
	Container size		5 l
	Suitable for ponds up to max.	[m³]	100.0
	Item no. (GB-Version)		Not available in GB
	Order no.		**50555**

*Use biocides carefully. Always read the label and product information before use!

			AquaActiv SediFree 5 l
Effective troubleshooter			**Effective against pond silt** • Contains high-performance bactertia for decomposition of organic silt deposits • Active oxygen granulate sinks deep into the layer of silt and oxidises it – micro-organisms that are specilised in decomposing organic material decompose the layer of silt • Focused prevention of silting and long term turbidity
	Container size		5 l
	Suitable for ponds up to max.	[m³]	100.0
	Order no.		**50561**

AquaActiv Water analysis Profi-Set

Professional drop solution for determination of 8 important water parameters - use the online water analysis tool for safe monitoring of the measured values

With the water analysis products the water values can be quickly and easily determined. But what are the next steps? In addition to the extensive user instructions, the Online Laboratory is available, giving you a digital analysis of your pond measurements and assisting in the usual pond problems you may encounter. The individual values, and their significance are explained via the Info buttons.

Click "Start Water Analysis" for an immediate overview of whether your values are in order, not ideal or possibly even dangerous. Of course, the right products for rectifying the problem will also be directly recommended.

pH GH KH NO_3 NO_2 PO_4 NH_4 NH_3

www.oase-livingwater.com/onlinelabor

AquaActiv Water analysis Profi-Set

Refill reagents:	
Nitrite / Nitrate	50660
Phosphate	50661
Total hardness / carbonate hardness	50662
Ammonium / Ammonia	50663
pH - value	50664

	AquaActiv Water analysis Profi-Set
Water analysis Profi-Set • Professional drop solutions for determination of 8 important water parameters • Particulary precise measurement result • Phosphate test incl. service life check solution	
Order no.	**50571**

Accessories

As a systems provider, we offer everything from a single source, from the smallest component to the largest component – innovative technology 'Made in Germany'. OASE original spare parts make the installation and maintenance of projects less complicated, more efficient and more convenient. The complete OASE assortment is provided in our separate Spare Parts Catalogue.

ACCESSORIES

244 In-ground niches
246 Floor-drain armatures
248 Overflow / drain armatures
250 Return armatures
252 Inflow nozzles
252 Floor / wall transitions
254 Overflow / return armatures
256 Suction filter baskets
258 Armatures

	Fresh Water	Pool Water	Sea Water	220-240 V	400 V	110-120 V	50 Hz	60 Hz	12 V AC	24 V DC	DMX	DMX/ RDM	Plug and Spray
NozzleChamber Single	●	○	○	○	○	○	○	○	○	○	○	○	○
NozzleChamber Vario	●	○	○	○	○	○	○	○	○	○	○	○	○

NozzleChamber Single / Vario

Compact water installations – even without a large pool can be quickly and easily implemented your design ideas in free spaces. The underground niches NozzleChamber Single and NozzleChamber Vario, offer ideal conditions for the uncomplicated installation of attractive water-light combinations without an open water surface.
The NozzleChamber Single is ideal for underground installation of the ProfiPlane LED 320 /DMX/02 or our Comet and Schaumsprudler fountain jets. With the NozzleChamber Vario you can also easily install the VarioSwitch 010a underground with the ProfiPlane LED 320 /DMX/02 or the Comet and Schaumsprudler fountain jets.

Product characteristics at a glance

- **Ideal for installation in open areas and multi-functional areas**
- **Easy installation**
- **With 3 DA 110 / DN 100 connections and 2 sealing caps**
- **G 1" pressure connection including 90° angle**
- **High-quality, robust stainless steel construction**

For details of **VarioSwitch 010a**, see **page 34**.

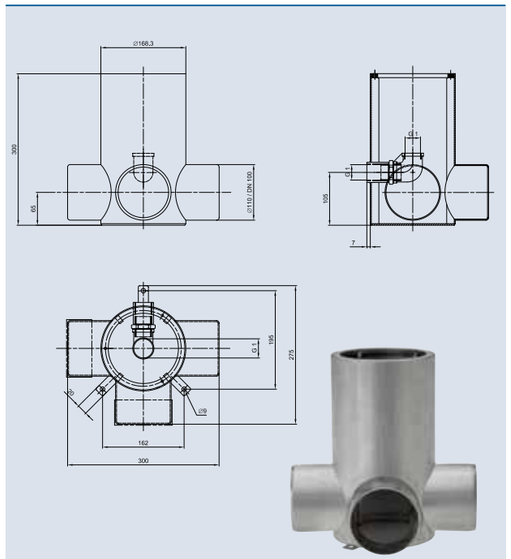

NozzleChamber Single

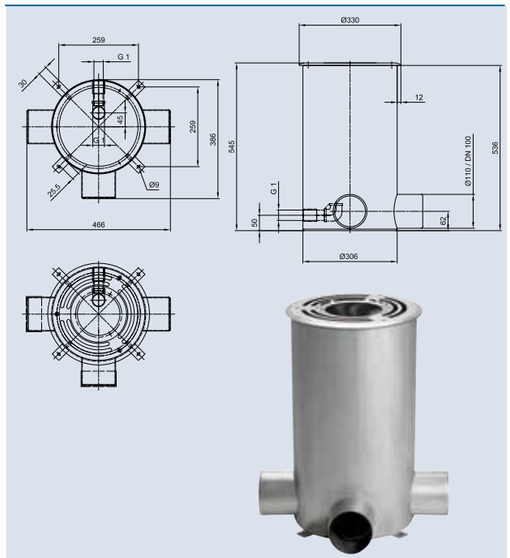

NozzleChamber Vario

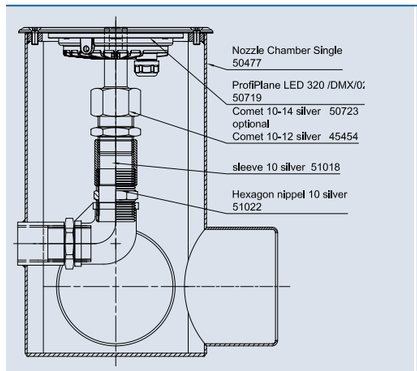

NozzleChamber Single

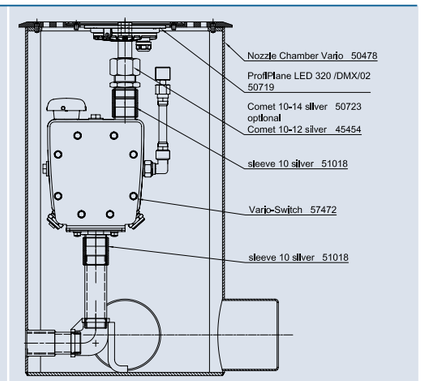

NozzleChamber Vario

5	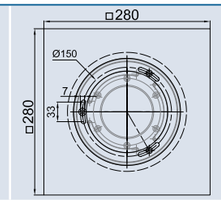 – Graphic shows special coverplate – Individual solution available on request	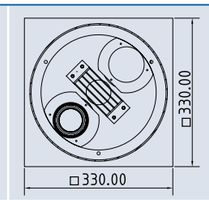 – Graphic shows special coverplate – Individual solution available on request
	Individual coverplate for NozzleChamber Single	**Individual coverplate for NozzleChamber Vario**
Order no.	58902	58902
4		
	ProfiPlane LED 320 /DMX/02 (see page 164)	**ProfiPlane LED 320 /DMX/02** (see page 164)
Order no.	50719	50719
3		
	Comet 10 - 12 Silver (see page 66) / **Comet 10 - 14 Silver** (see page 66)	**Comet 10 - 12 Silver** (see page 66) / **Comet 10 - 14 Silver** (see page 66)
Order no.	45454 / 50723	45454 / 50723
2	can also be connected to other nozzles (e.g. Schaumsprudler 35 - 10 E)	
		VarioSwitch 010a / 24 V (see page 34)
Order no.		57472
1		
	NozzleChamber Single	**NozzleChamber Vario**
Dimenions (L x W x H) [mm]	300 x 275 x 300	466 x 386 x 536
Pressure connection [inch]	1	
Connection drain	3 x Ø 110/DN 100	
Material	Stainless steel 1.4301 (AISI 304)	Stainless steel 1.4301 / 1.4571 / Brass (AISI 304 /316Ti)
Weight [kg]	5.5	23.0
Order no.	50477	50478

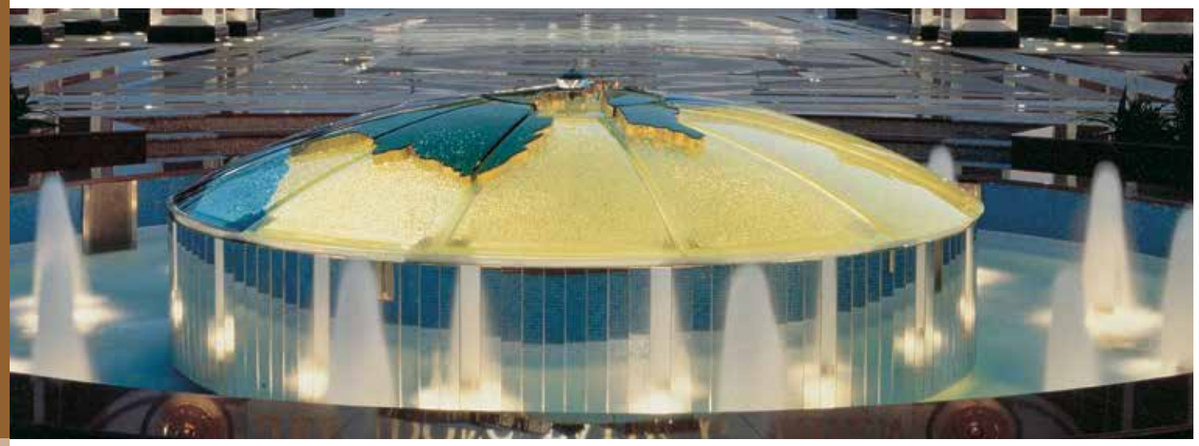

	Fresh Water	Pool Water	Sea Water	220-240 V	400 V	110-120 V	50 Hz	60 Hz	12 V AC	24 V DC	DMX	DMX/ RDM	Plug and Spray
Floor drain armatures	●	○	○	○	○	○	○	○	○	○	○	○	○

Floor drain armatures

Concrete or liner pools can be easily emptied via OASE floor drains. The drains are available with plug or with sieve.

Subsurface installation of a slide valve is required for discharging the models with debris sieve. Suitable cover sieves for the floor drains prevent excessive debris from getting into the drain (accessories).

The floor components of the drain armatures have concrete sealing flanges and can simply be inserted and cemented into the muffs of the drain pipes. Appropriate bores are available for connection to the equipotential bonding.

Appropriate liner clamping flanges with seal and bolts are available for flanging and sealing to liner. They are suitable for normal pool liner, with or without textile reinforcement and a maximum thickness of 2.5 mm, however they are not suitable for waterproofing membranes in accordance with DIN 18195.

1 The concrete part is the basis of every configuration. Available for DN 70 and / or DN 100 pipes.

2 The clamping flange is for fastening with liner. Products with cable transitions are listed on page 247.

This position can be used optionally.

3 Depending on the requirement a decision is made at this point concerning the specific implementation: Plug, sieve, overflow or level regulator...

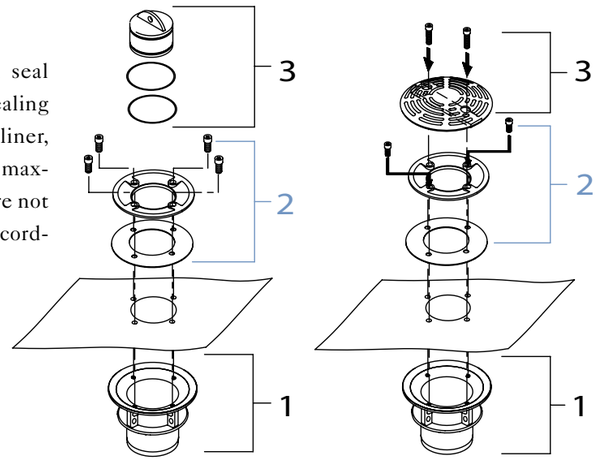

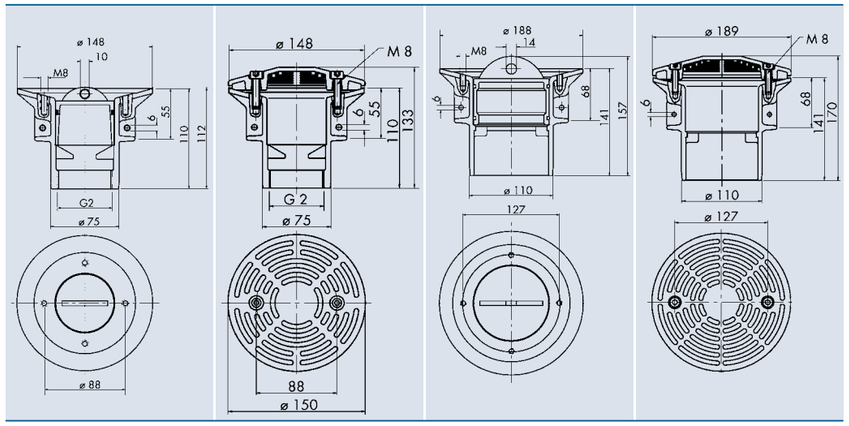

3

	Plug 70 T	Debris sieve 70 E	Plug 100 T	Debris sieve 100 E
Dimensions (ø) [mm]	70	150	100	190
Designation	plug	debris sieve	plug	debris sieve
Connection	DN 70	DN 70	DN 100	DN 100
Material	Tombac	Stainless steel 1.4301 (AISI 304)	Tombac	Stainless steel 1.4301 (AISI 304)
Weight [kg]	0.6	0.6	0.9	0.7
Order no.	57468	51973	57462	51974

2 (optional)

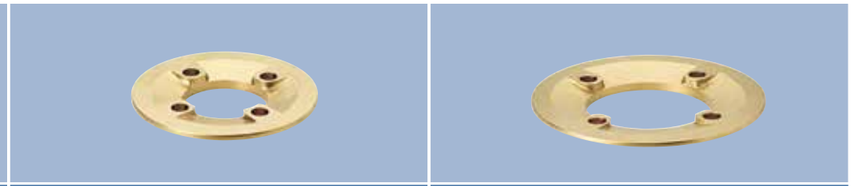

	Liner clamping flange 70 T	Liner clamping flange 100 T
Dimensions (ø x H) [mm]	148 x 14	188 x 16
Designation	liner clamping flange	liner clamping flange
Connection	DN 70	DN 100
Material	Tombac	Tombac
Weight [kg]	1.1	1.4
Order no.	51108	51117

1

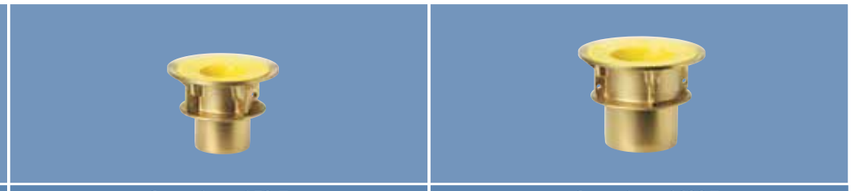

	Concrete part 70 T	Concrete part 100 T
Dimensions (ø x H) [mm]	70 x 110	100 x 141
Designation	concrete part	concrete part
Connection	DN 70 / 2"	DN 100
Material	Tombac	Tombac
Weight [kg]	2.1	3.2
Order no.	57471	57467

	Fresh Water	Pool Water	Sea Water	220-240 V	400 V	110-120 V	50 Hz	60 Hz	12 V AC	24 V DC	DMX	DMX/ RDM	Plug and Spray
Overflow/drain armatures	●	○	○	○	○	○	○	○	○	○	○	○	○

Overflow/drain armatures

The optimal combination of overflow and drain: An overflow pipe inserted in the drain discharges excess water from filled pools. It is simply pulled out to empty the pool.

The overflow pipe with overflow crown has a standard length of 1000 mm, however it can be shortened to adapt to a lower water level. A debris/winter sieve can also be ordered for protection against coarse debris (see page 246).

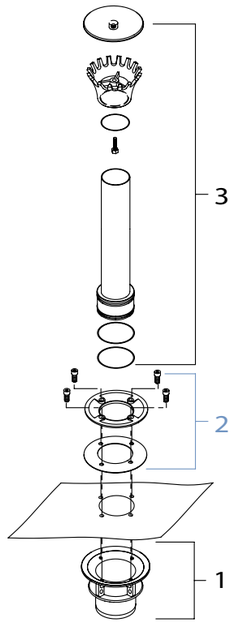

Product characteristics at a glance

- Optimal combination of overflow and drain
- Easy installation
- For water levels from 0 to 1000 mm
- Stainless steel standpipe
- Cast parts are made of corrosion-resistant tombac alloy

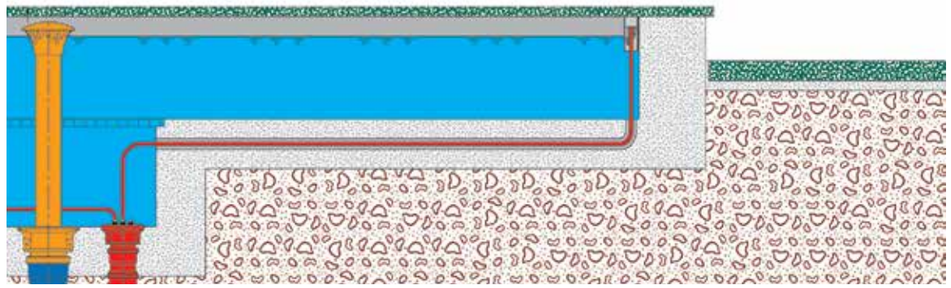

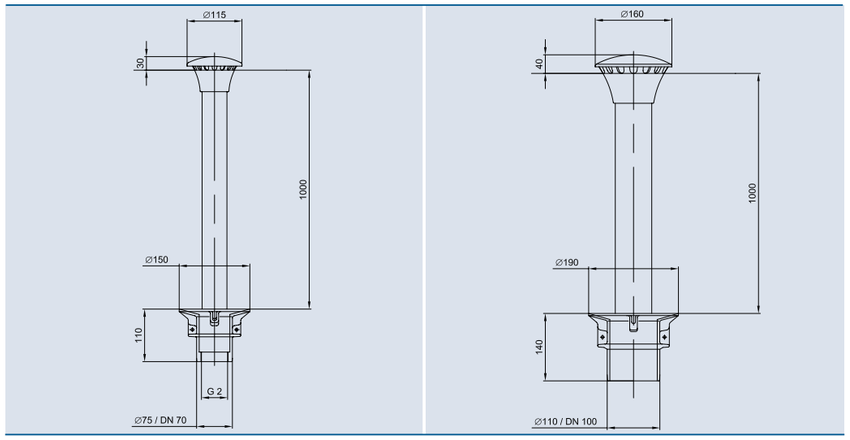

3

	Overflow/drain armature 70 / 1000 T	Overflow/drain armature 100 / 1000 T
Dimensions (ø x H) [mm]	115 x 1054	160 x 1108
Designation	overflow / drain armature	overflow / drain armature
Connection	DN 70	DN 100
Material	Tombac / stainless steel	Tombac / stainless steel
Weight [kg]	3.2	7.2
Order no.	57469	57463

2 (optional)

	Liner clamping flange 70 T	Liner clamping flange 100 T
Dimensions (ø x H) [mm]	148 x 14	188 x 16
Designation	liner clamping flange	liner clamping flange
Connection	DN 70	DN 100
Material	Tombac	Tombac
Weight [kg]	0.9	1.1
Order no.	51108	51117

1

	Concrete part 70 T	Concrete part 100 T
Dimensions (ø x H) [mm]	70 x 110	100 x 141
Designation	concrete part	concrete part
Connection	DN 70 / 2"	DN 100
Material	Tombac	Tombac
Weight [kg]	2.1	3.2
Order no.	57471	57467

Accessories
Overflow / Drain armatures

	Fresh Water	Pool Water	Sea Water	220-240 V	400 V	110-120 V	50 Hz	60 Hz	12 V AC	24 V DC	DMX	DMX/ RDM	Plug and Spray
Return armature	●	○	○	○	○	○	○	○	○	○	○	○	○

Return armature

Return armatures channel the water from the pool back to the water reservoir and thus closing the water circuit. Size and quantity are calculated on the basis of the water volume flowing through the circuit.

For safety reasons at least two return armatures must be provided. A maximum return speed of 0.6 m/s should serve as the basis for calculating the nominal return diameter.
The standpipe 100/500 T can be shortened for adaption to the water level. For a constant water level the armatures can be pushed onto the slightly chamfered pipes. Otherwise the return armature 200/100 T is simply inserted in the muffs of the drain pipes and embedded in concrete.

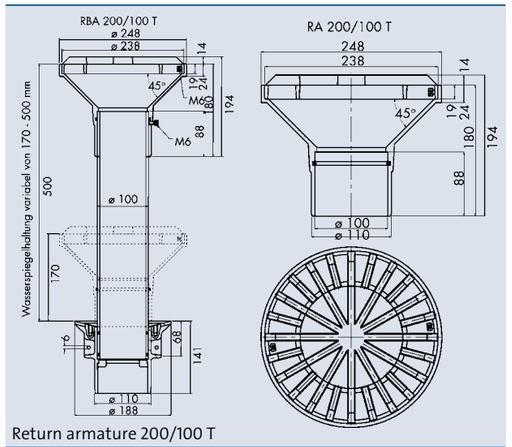

Return armature 200/100 T

The floor part has a concrete sealing flange and can easily be inserted in the muffs of the drain pipe and embedded in concrete. Appropriate bores are available for connection to the equipotential bonding. Appropriate liner clamping flanges with seal and bolts are available for flanging and sealing to liner. They are suitable for normal pool liner, with or without textile reinforcement, and a maximum thickness of 2.5 mm, however they are not suitable for waterproofing membranes in accordance with DIN 18195.

Product characteristics at a glance

- **Large and effective debris sieves**
- **Cast parts are made of corrosion-resistant tombac alloy**
- **Easy installation**
- **Versatile implementation**

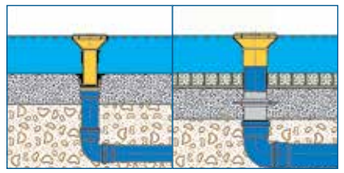

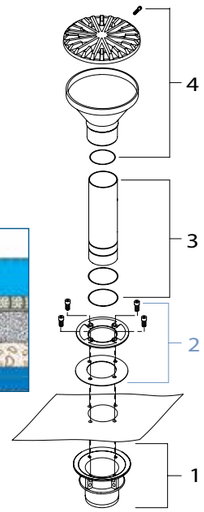

4

	Return armature 200 / 100 T
Dimensions (ø x H) [mm]	248 x 194
Designation	return armature
Connection	DN 100
Material	Tombac
Weight [kg]	8.5
Order no.	**51123**

3

	Standpipe 100/500 T
Dimensions (ø x H) [mm]	100 x 170-500 (variable)
Designation	standpipe
Connection	DN 100
Material	Stainless steel 1.4301 (AISI 304)
Weight [kg]	4.5
Order no.	**57466**

2 (optional)

	Liner clamping flange 100 T
Dimensions (ø x H) [mm]	188 x 16
Designation	liner clamping flange
Connection	DN 100
Material	Tombac
Weight [kg]	1.1
Order no.	**51117**

1

	Concrete part 100 T
Dimensions (ø x H) [mm]	100 x 141
Designation	concrete part
Connection	DN 100
Material	Tombac
Weight [kg]	3.2
Order no.	**57467**

	Fresh Water	Pool Water	Sea Water	220-240 V	400 V	110-120 V	50 Hz	60 Hz	12 V AC	24 V DC	DMX	DMX/ RDM	Plug and Spray
Floor/wall transition	●	●	○	○	○	○	○	○	○	○	○	○	○
Inflow nozzle 15 E	●	●	○	○	○	○	○	○	○	○	○	○	○

Inflow nozzle 15 E

For undisturbed satisfaction in clean fountain pools and ponds.

Filtered water is fed back into the pool through stainless steel and bronze inflow nozzles. Direction of flow can be changed by adjusting the nozzle.

Fresh water inlet armatures are used to fill the pool and for top-up feed of evaporated water from the public drinking water network. The water-level can be adjusted from 100 to 1000 mm.

Floor/Wall transitions

Trouble-free pipe routing through pool walls or pool floors is indispensable.

OASE floor/wall transitions are made of high-grade stainless steel and have a large-surface concrete-tight flange with grounding possibility.
Models with liner clamping flange are available for pools with liner.

Product characteristics at a glance

- **Versatile implementation**
- **Easy to install**
- **Extremely corrosion resistant**

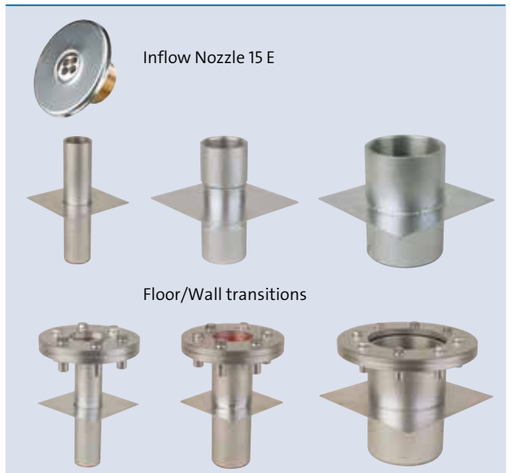

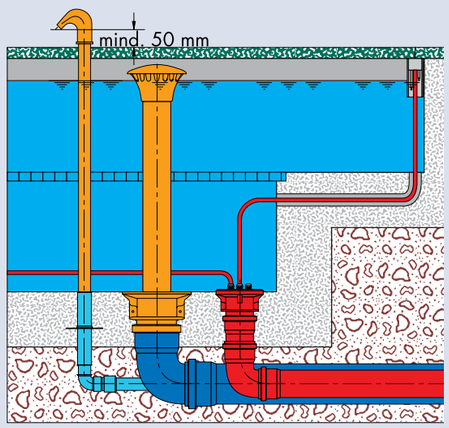

Inflow nozzle	Inflow nozzle 15 E

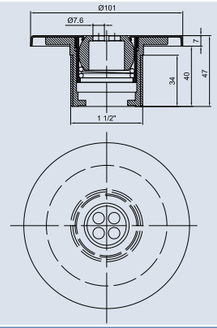

Inflow nozzle	Inflow nozzle 15 E
Dimenions (Ø x H) [mm]	ø 101 x 31
Thread	1 ½"
Material	Stainless steel/bronze
Weight [kg]	0.3
Order no.	53086

Floor/Wall transition	10-175 E	15-175 E	20-175 E	40-175 E

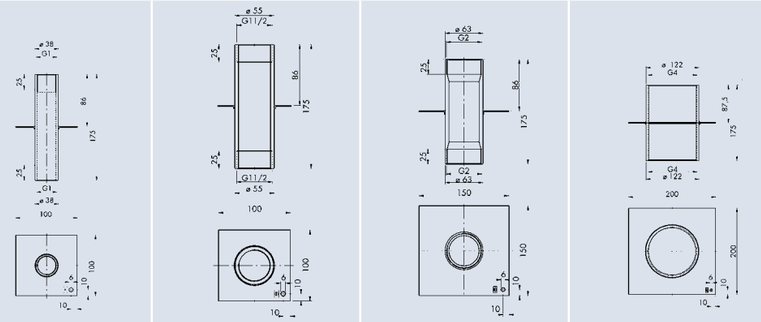

Floor/Wall transition	10-175 E	15-175 E	20-175 E	40-175 E
Dimenions (L x W x H) [mm]	100 x 100 x 175	100 x 100 x 175	150 x 150 x 175	200 x 200 x 175
Thread	1"	1 ½"	2"	4"
Material	Stainless steel 1.4571 (AISI 316Ti)			
Weight [kg]	0.6	1.1	2.0	3.6
Order no.	51141	51142	51143	52790

Floor/Wall transition	F 10-175 E	F 15-175 E	F 20-175 E	F 40-175 E

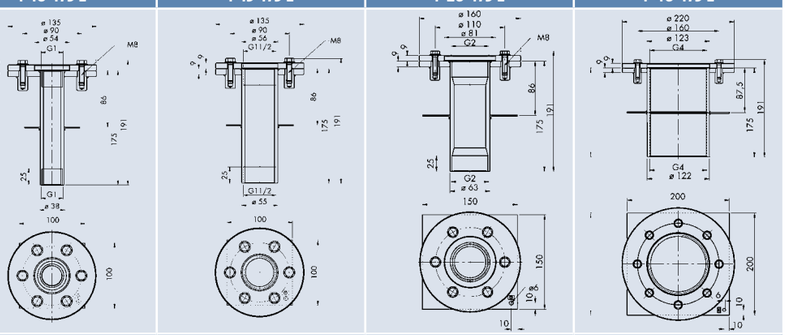

Floor/Wall transition	F 10-175 E	F 15-175 E	F 20-175 E	F 40-175 E
Dimenions (L x W x H) [mm]	100 x 100 x 191	100 x 100 x 191	150 x 150 x 191	200 x 200 x 191
Thread	1"	1 ½"	2"	4"
Material	Stainless steel 1.4571 (AISI 316Ti)			
Weight [kg]	3.0	3.4	4.7	8.3
Order no.	51145	51146	51147	53013

Accessories
Inflow nozzles / Floor/Wall transition

	Fresh Water	Pool Water	Sea Water	220-240 V	400 V	110-120 V	50 Hz	60 Hz	12 V AC	24 V DC	DMX	DMX/ RDM	Plug and Spray
Overflow/return box 100 E	●	○	○	○	○	○	○	○	○	○	○	○	○

Overflow/return box 100 E

These armature can be used to discharge excess pool water.

Overflow/return armature is installed in the vertical pool wall. Number of armatures used are based on the volume of water that will be returned. However at least two return armatures should be used for safety reasons. A maximum return speed of 0.6 m/s should serve as the basis for calculating the nominal return pipe diameter. The connection ducts easily fit in all muffs of the drain pipes.

Overflow/return box 100 E

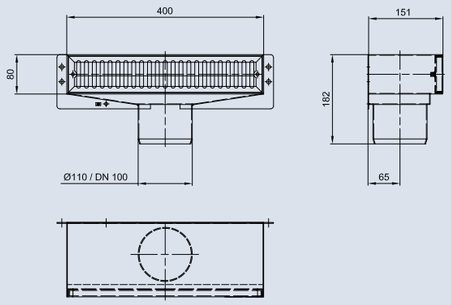

Product characteristics at a glance

- For installation in vertical pool walls
- Large and effective debris sieves
- Connection suitable for the muffs of the drain pipe
- Manufactured completely of stainless steel

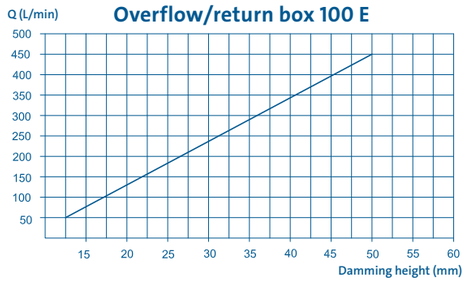

	Overflow/return box 100 E
Dimensions (L x W x H) [mm]	450 x 150 x 180
For pools with liner	no
Connection	DN 100
Material	Stainless steel 1.4301 / 1.4571 (AISI 304/316Ti)
Weight [kg]	6.0
Order no.	52602

	Fresh Water	Pool Water	Sea Water	220-240 V	400 V	110-120 V	50 Hz	60 Hz	12 V AC	24 V DC	DMX	DMX/ RDM	Plug and Spray
Overflow wall-installation	●	○	○	○	○	○	○	○	○	○	○	○	○

Overfl. wall-inst. comb. armature 100 E

This is a three-in-one armature: It is an inlet armature, overflow armature, and at the same time it controls the water level – if equipped with an additional water level sensor.

The combination armature is preferably installed in the side pool wall below the pool edge cover. Installation is simple, the overflow duct fits into the muff of the channel pipe. The fresh water feed pipe and the connection of the cable protection pipe for the water level sensor are connected to the appropriate threaded nipple via PE pipe unions. The overflow funnel can be pushed up or pushed down 20 mm to adjust to the water level.

Overfl. wall-inst. comb. armature 100 E

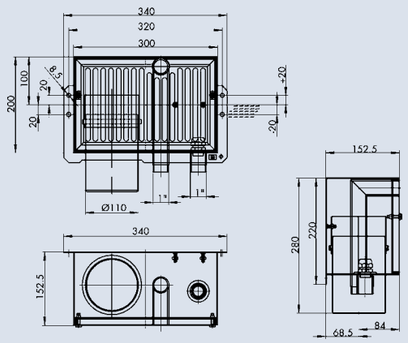

Product characteristics at a glance

- Elegant combination of freshwater inlet and pool overflow
- Installation possibility for water-level sensor
- Water level can be corrected +/- 20 mm retroactively
- Completely made of stainless steel

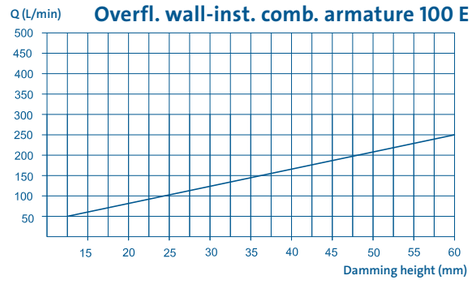

	Overfl. wall-inst. comb. armature 100 E
Dimensions (L x W x H) [mm]	340 x 271 x 153
For pools with liner	no
Connection	DN 100/1"
Material	Stainless steel 1.4571 (AISI 316Ti)
Weight [kg]	6.1
Order no.	51120

	Fresh Water	Pool Water	Sea Water	220-240 V	400 V	110-120 V	50 Hz	60 Hz	12 V AC	24 V DC	DMX	DMX/ RDM	Plug and Spray
Suction filter baskets	●	○	○	○	○	○	○	○	○	○	○	○	○

Suction filter baskets 200/15 E to 600/530/250 E

Suction filter baskets are mounted on the inlets of the suction lines to protect the pump/nozzle water circuit from coarse debris.

Product characteristics at a glance

- Protects pump and nozzle from coarse debris
- Large filter surface
- Easy installation
- Solid and robust construction
- Corrosion resistant

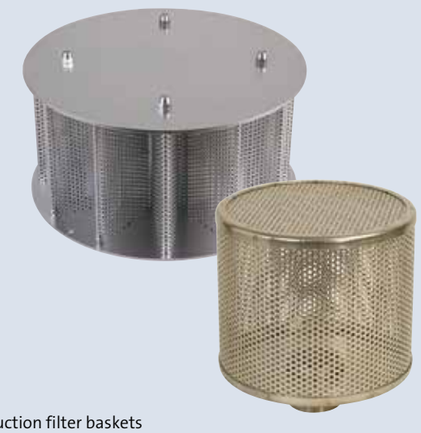

Suction filter baskets

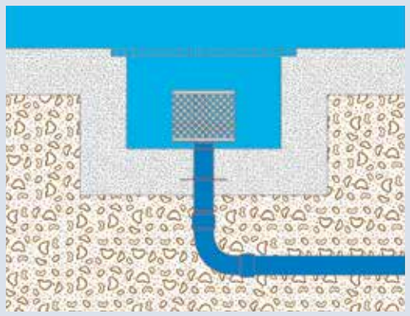

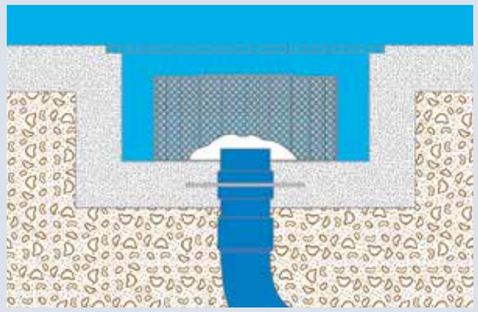

The baskets are available in different sizes and have extra large filter surfaces that ensure a sufficiently long cleaning interval. In this regard the perforated filter plates for the medium-sized and large filter baskets have been folded multiple times in a star pattern. The stainless steel perforated plate has 4 mm holes.

The small suction filter baskets are screwed directly onto the pool floor channels. The medium and large baskets are simply placed over the suction line pipe that projects approximately 50 mm above the pool floor and permanently anchored.

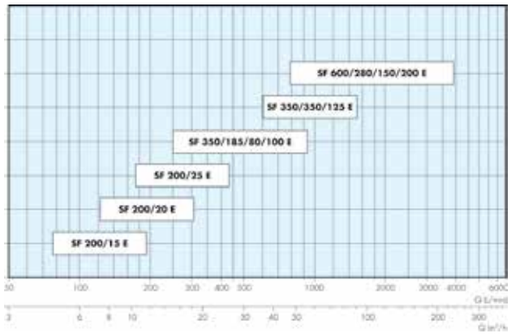

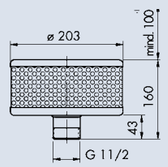

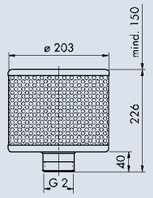

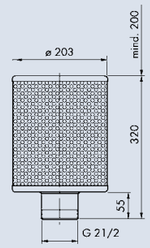

	Suction filter basket 200/100/15 E	Suction filter basket 200/166/20 E	Suction filter basket 200/250/25 E
Dimensions (Ø x H) [mm]	203 x 160	203 x 226	203 x 320
Connection [inch]	1 ½"	2"	2 ½"
Filter surface [m²]	0.08	0.12	0.18
Particle strainer Ø [mm]	4.0	4.0	4.0
Material	Stainless steel	Stainless steel	Stainless steel
Weight [kg]	1.1	1.5	1.8
Order no.	51082	51083	51084

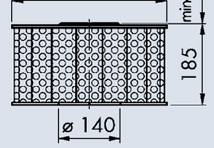

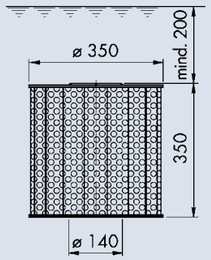

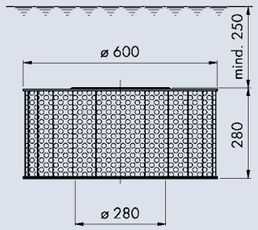

	Suction filter basket 350/185/80/100 E	Suction filter basket 350/350/125 E	Suction filter basket 600/280/150/200 E
Dimensions (Ø x H) [mm]	350 x 185	350 x 350	600 x 280
Connection	DN 80/100	DN 125	DN 150/200
Filter surface [m²]	0.44	0.88	1.5
Particle strainer Ø [mm]	4.0	4.0	4.0
Material	Stainless steel	Stainless steel	Stainless steel
Weight [kg]	9.5	11.5	43.1
Order no.	51753	54755	51756

Swivel connection

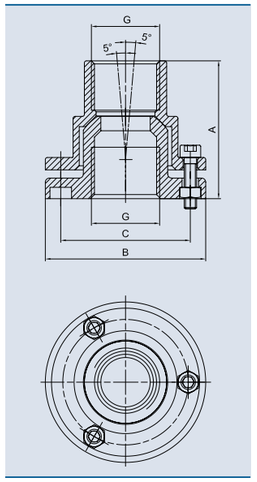

Fresh Water | Pool Water | Sea Water

Product characteristics at a glance

- Adjustment for nozzles
- Silver optic
- Durable chrome and nickel plated brass

Swivel Connection silver		10	15	20
G	[inch]	1	1 ½	2
A	[mm]	70	75	88
B	[mm]	78	101	127
C	[mm]	63	80	104
Weight	[kg]	0.55	1.12	2.05
Order no.		51015	51016	51017

Sleeve Silver

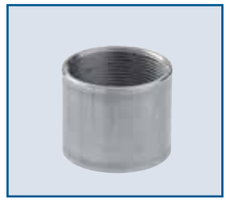

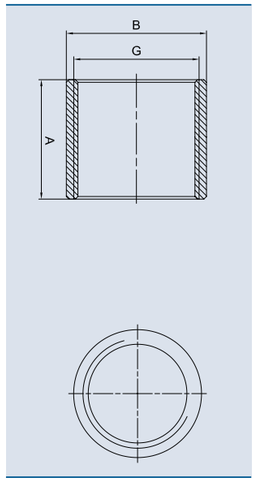

Fresh Water | Pool Water | Sea Water

Product characteristics at a glance

- Straight threading
- High-quality stainless steel

Sleeve Silver		10	15	20	30
A	[mm]	42.3	47.2	51.7	66.7
B	[mm]	38.0	53.5	66.0	95.0
G	[inch]	1	1 ½	2	3
Material		Stainless steel			
Weight	[kg]	0.09	0.16	0.25	0.63
Order no.		51018	51019	51020	51021

Hexagon Nipple Silver

Product characteristics at a glance

- Straight threading
- High-quality stainless steel

Fresh Water | Pool Water | Sea Water

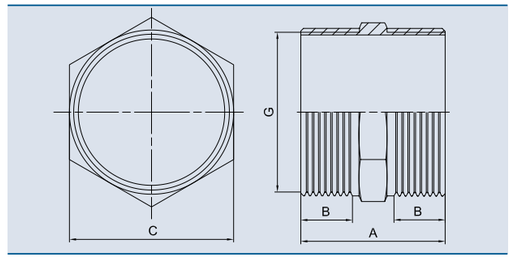

Hexagon Nipple Silver		10	15	20	30
G	[inch]	1	1 ½	2	3
A	[mm]	49	51.5	54.5	68
B	[mm]	20.4	20.7	22	27.5
C	[mm]	35	50	62	91
Material		Stainless steel			
Weight	[kg]	0.065	0.20	0.40	0.51
Order no.		51022	51023	51024	51025

Adapter G/NPT

Fresh Water | Pool Water | Sea Water

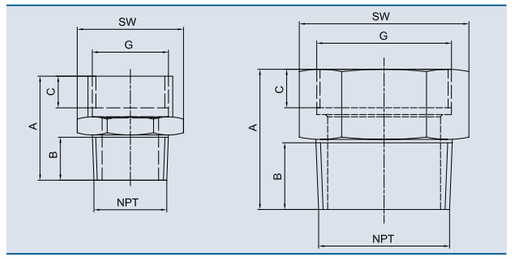

Adapter		G10/NPT10	G15/NPT15	G20/NPT20	G30/NPT30
A	[mm]	46	43	62	78
B	[mm]	21	21	29	37
C	[mm]	16	14	17	20
SW	[mm]	36	50	65	95
G	[inch]	1	1 ½	2	3
Weight	[kg]	0.145	0.238	0.493	0.68
Order no.		51026	51027	51028	51029

Reducing Sleeve

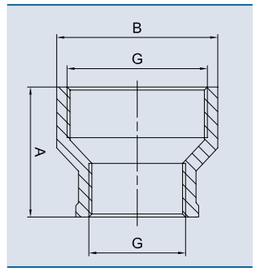

Fresh Water | Pool Water | Sea Water

Product characteristics at a glance

- High-quality stainless steel
- Straight threading

Reducing Sleeve		15 x 10	20 x 15
A	[mm]	50	59
B	[mm]	57	70
G	[inch]	1 ½ - 1	2 - 1 ½
Weight	[kg]	0.175	0.225
Order no.		51032	51030

Flow valve 10

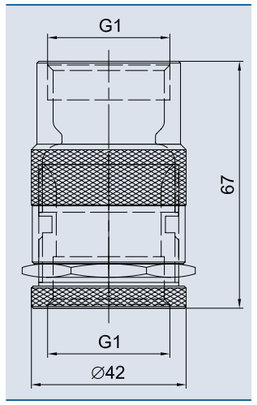

Fresh Water | Pool Water | Sea Water

Product characteristics at a glance

- Flow regulator
- Use below nozzle
- High-quality stainless steel
- Straight threading

Flow Valve 10		
Dimensions (Ø)	[mm]	42 x 67
Material		Stainless steel
Weight	[kg]	0.3
Order no.		51033

JumpingJet Rainbow Star Installation kit

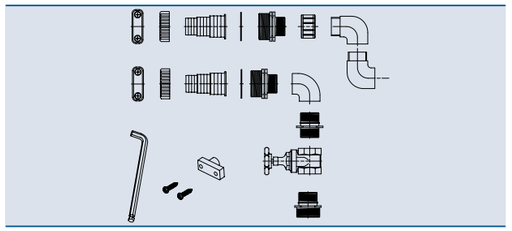

Fresh Water | Pool Water | Sea Water

Scope of delivery

JumpingJet Rainbow Star Installation Kit		
	2	Flat gasket hose tail 1½"
	2	Coupling nut 1½" 40 – 20
	2	Stepped hose tail 1 ½" black
	1	Bush plastic 1"
	1	Bracket 90° G1 I-I plastic
	1	Hexagonal Nipple R1"
	2	Red. Nippel 1½" AG to 1" AG
	1	MS. shut off gate valve 1" 290
	2	Screws V2A DIN 7981, 4,8 x 25
	1	Gland seal Rainbow Star
	1	Hexagon screwdriver 5mm
	1	Flat gasket 53 x 48 x 1.5 mm NBR/SBR 70Sh
	2	Elbow 90° G1 I-A plastic
	2	Hose clamp 20 - 32 mm
	2	Hose clamp 35 – 50 mm 1.4301
	1	Coupling nut 1½" 40 - 20
	1	1 Bush plastic 1"
Weight	[kg]	0.84
Order no.		51058

Swivel ball joint 10

Fresh Water | Pool Water | Sea Water

Product characteristics at a glance

- Adjustment for nozzles
- Straight threading
- Durable chrome and nickel plated brass

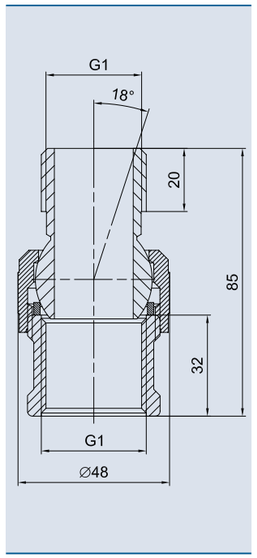

Swivel ball joint 10		
Dimensions (Ø)	[mm]	48 x 85
Material		Nickel plated brass
Weight	[kg]	0.37
Order no.		51165

Explanatory notes

Patent applied for

Patented

Certificate

Certificate

Certificate

Certificate

Definition of product performance

= not applicable

= applicable

Fresh Water	Pool Water	Sea Water

DMX	DMX/ RDM	Plug and Spray

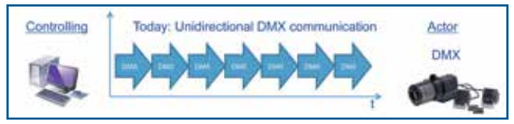

DMX is a communication protocol (Digital Multiplex). This product can use the Unidirectional DMX communication.

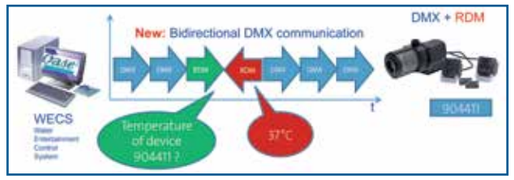

DMX/RDM The DMX-Bus now is bidirectional. This is possible because of the protocol expansion RDM (Remote Device Management). This product can use the Bidirectional DMX communication. The connecting technique stays unchanged.

Plug and Spray Through the special connection Technology for cables, wiring by hand is no longer necessary. Put the plug in the plug socket and fix them with the two screws to make it waterproof (IP68).

Water quality

Types	Fresh Water	Pool Water	Sea Water
pH-Wert pH value Valeur pH Valor pH	7.2 - 7.6	7.2 - 7.6	8.0
Härte Hardness Dureté Cloro libre	8 - 15 °dH	8 - 15 °dH	20 - 30 °dH
Freies Chlor Free chlorine Chlore libre Dureza	< 0.3 mg/l	0.3 - 0.6 mg/l	< 0.3 mg/l
Chloridgehalt Chloride concentration Teneur en chlorure Contenido de cloruro	< 250 mg/l	< 250 mg/l	22000 mg/l
Salzgehalt Salinity Teneur en sel Contenido de sal	–	–	< 4.0 %
Abfiltrierte Stoffe Total suspended solids Totat résidus en suspension Sólidos totales en suspensión	< 50 mg/l	< 50 mg/l	< 50 mg/l
Temperatur Temperature Température Temperatura	4° - 35° C	4° - 30° C	4° - 20° C

Water quality

Types	Fresh Water	Pool Water	Sea Water
pH-Wert pH value Valeur pH Valor pH	7.2–7.6	7.2–7.6	8.0
Härte Hardness Dureté Cloro libre	142-267 ppm $CaCO_3$	142-267 ppm $CaCO_3$	356-534 ppm $CaCO_3$
Freies Chlor Free chlorine Chlore libre Dureza	< 0.3 ppm	0.3–0.6 ppm	< 0.3 ppm
Chloridgehalt Chloride concentration Teneur en chlorure Contenido de cloruro	< 250 ppm	< 250 ppm	22,000 ppm
Salzgehalt Salinity Teneur en sel Contenido de sal	–	–	< 4.0%
Abfiltrierte Stoffe Total suspended solids Totat résidus en suspension Sólidos totales en suspensión	< 50 ppm	< 50 ppm	< 50 ppm
Temperatur Temperature Température Temperatura	39°–95° F	39°–86° F	39°–68° F

Information on the energy efficiency classes of OASE spotlights

A++
A+
A
B
C
D
E

The EU Energy Consumption mark provides information concerning the energy efficiency class of a light fixture, i.e. the ratio of light output to power consumption, as well as information concerning other characteristics of the product. Power saving LED bulbs reach an energy efficiency class of A++ to A, efficient halogen bulbs must be assigned to classes B to C.

For your information, here we have presented the energy efficiency classes of the OASE illumination product range together with more detailed information in an overview.

Order no.	Product	Catalogue page	Energy efficiency class of light fixture	This light fixture includes installed LED bulbs	The bulbs in the light fixture cannot be replaced	Weighted energy consumption per light fixture [kWh/h]
34137	JumpingJet Rainbow Star II /DMX/02	30	A	x	x	10
34138	JumpingJet Rainbow Flash III /DMX/02	32	A	x	x	10
42637	LED-Floating Fountain Illumination White	114	A++	x		20
42641	Floating Fountain Illumination Set RGB	114	A	x	x	7
56267	ProfiLux LED 110 /DMX/02	154	A	x	x	7
50717	ProfiLux LED 320 /DMX/02	156	A	x	x	18
56388	ProfiLux LED Spot 1500 /DMX/02	158	A	x	x	35
56391	ProfiLux LED Flood 1500 /DMX/02	160	A	x	x	35
56298	ProfiPlane LED 110 /DMX/02	162	A	x	x	7
50719	ProfiPlane LED 320 /DMX/02	164	A	x	x	18
50718	ProfiRing LED 320 /DMX/02	166	A	x	x	18
56331	ProfiLux LED 350 /01	168	A	x	x	9
51296	ProfiLux LED 1100 /01	170	A	x	x	26
56401	ProfiLux LED Spot 2200 /01	172	A	x	x	61
56402	ProfiLux LED Flood 2200 /01	174	A	x	x	61
70977	LED Modul MDD L 2D /DMX/02	180	A	x	x	53
70975	LED Modul MDD L 3D /DMX/02	180	A	x	x	53
45077	LED Modul MDD XL 2D /DMX/02	182	A	x	x	105
48638	LED Modul MDD XL 3D /DMX/02	182	A	x	x	105

Abbreviations

A . . . . Area
AF . . . . Filter area
ASW . . . . Beam angle
b, b1, b2, b3 . . . . Width
d, d1, d2, d3 . . . . Diameter
Da . . . . Diameter external
DAS . . . . Nozzle delivery jet diameter
DD . . . . Diameter pressure connection
DDB . . . . Nozzle pressure requirement
DDG . . . . Nozzle diameter (greatest)
Di . . . . Diameter interior
DID . . . . Nozzle injector diameter
DN . . . . Nominal diameter
DNa . . . . Nominal diameter output
DNe . . . . Nominal diameter input
DS . . . . Diameter suction connection
DAW . . . . Nozzle adjustment angle
DSD . . . . Nozzle spray diameter
DWB . . . . Nozzle water requirement
E . . . . Luminous intensity
FH . . . . Fountain height
FL . . . . Flange
G . . . . Thread
GBZ . . . . Tombak
GW . . . . Weight
h, h1, h2, h3 . . . . Height
H . . . . Pump delivery head
I . . . . Current strength
I . . . . Light intensity
l, l1, l2, l3 . . . . Length
KD . . . . Calyx diameter
KH . . . . Calyx height
LW . . . . Clear opening
MA . . . . Material
MBD . . . . Minimium pool diameter
n . . . . Speed
O . . . . Surface
p . . . . pressure
P . . . . Power
PH . . . . Parabola height
PH% . . . . Parabola height in percent
PN . . . . Nominal pressure
PW . . . . Parabola width
Q . . . . Flow, volume flow
r . . . . Radius
R . . . . Electrical resistance
RRW . . . . Pipe frictional resistance
SB . . . . Slot width
SL . . . . Slot length
SPB . . . . Spray width
s . . . . Thickness
t . . . . Time, time-frame, duration
U . . . . Voltage
v . . . . Flow velocity
V= . . . . Direct current
w . . . . Distance to water level
x, x1, x2, x3 . . . . Distance general
z . . . . Quantity general
za . . . . Number of outlets
zd . . . . Number of nozzles
ze . . . . Number of inlets
zl . . . . Number of holes
zp . . . . Number of pumps
zs . . . . Number of spotlights

Conversion tables

Liter			
1,0	l (Liter)	= 0,2642	US Gal (gallon)
1,0	US Gal (gallon)	= 3,7851	l (Liter)
1,0	l (Liter)	= 0,2200	UK Gal
1,0	UK Gal	= 4,5460	l (Liter)
Liter pro minute			
1,0	l (Liter)/ min	= 15,8520	US Gph (gallons per hour)
1,0	US Gph (gallon per hour)	= 0,0631	l (Liter)/ min
1,0	l (Liter) / min	= 13,2000	UK Gph (gallons per hour)
1,0	UK Gph (gallon per hour)	= 0,0758	l (Liter) / min
Meter/Kilometer			
1,0	m (Meter)	= 3,2810	ft (feet)
1,0	ft (foot)	= 0,3048	m (Meter)
1,0	m (Meter)	= 39,3700	In. (Inch)
1,0	In. (Inch)	= 0,0254	m (Meter)
1,0	m (Meter)	= 1,0936	yd (Yard)
1,0	yd (Yard)	= 0,9144	m (Meter)
1,0	km (Kilometer)	= 0,5310	nmi (Nautic Miles (Int))
1,0	nmi (Nautic Mile (Int))	= 1,8520	km (Kilometer)
Quadratmeter			
1,0	m^2 (Quadratmeter)	= 10,7527	sq.ft (square feet)
1,0	sq.ft (square foot)	= 0,0930	m^2 (Quadratmeter)
1,0	ha = 10000 m^2	= 2,4691	acres
1,0	acre	= 0,4050	ha (Hektar)
Kilogramm			
1,0	kg (Kilogramm)	= 2,2046	lb. (pound) avdp
1,0	avdo. lb.	= 0,4536	kg (Kilogramm)
Kilowatt			
1,0	kW (Kilowatt)	= 1,3410	hp (horsepower)
1,0	hp (horsepower)	= 0,7457	kW (Kilowatt)
Grad			
0,0	°C (Grad Celsius)	= 32	°F (Grad Fahrenheit)
20,0	°C (Grad Celsius)	= 68	°F (Grad Fahrenheit)
0,0	°F (Grad Fahrenheit)	= -17,8	°C (Grad Celsius)
50,0	°F (Grad Fahrenheit)	= 10,0	°C (Grad Celsius)
A	**To compute Fahrenheit:**	Multiply Centigrade by 1,8 and add 32	
B	**To compute Centigrade:**	Subtract 32 from Fahrenheit and divide by 1,8	

Alphabetical Product Overview

Order no.	Description	Page
51026	Adapter G 10 / NPT 10 Silver	258
51027	Adapter G 15 / NPT 15 Silver	258
51028	Adapter G 20 / NPT 20 Silver	258
51029	Adapter G 30 / NPT 30 Silver	258
50433	AFM filter medium	232
50183	AirFlo 1.5 kW / 230 V	230
50185	AirFlo 4.0 kW / 400 V	230
48422	AirNozzle 20 E-6m vertical /01	48
48423	AirNozzle 20 E-14m vertical /01	48
48424	AirNozzle 20 E-15m horizontal /01	48
48425	AirNozzle 24 E-20m horizontal /01	48
48426	AirNozzle 24 E-30m vertical /01	50
48427	AirNozzle 50 E-50m vertical /01	50
48428	AirNozzle 50 E-70m vertical /01	50
53913	Anemometer K	220
50549	AquaActiv AlGo Direct 5 l	240
40234	AquaActiv AlGo Fountain 5 l	237
50545	AquaActiv AlGo Universal 5 l	239
50558	AquaActiv OptiPond 5 l	239
51287	AquaActiv PhosLess Direct 5 l	239
50555	AquaActiv PondClear 5 l	240
50561	AquaActiv SediFree 5 l	240
50571	AquaActiv Water analysis Profi-Set	241
57479	AquaAir 250	228
56617	Aquarius Universal Premium 5000	134
56879	Aquarius Universal Premium 12000	134
56637	Aquarius Universal Premium 6000	134
56876	Aquarius Universal Premium 9000	134
55351	Backwash Automatic Eurotronik	232
51165	Ball Joint 10	259
52127	BigFlameAqua	62
45308	BT 1,1-65-4 IE3	140
45306	BT 1,5-50-4 IE3	140
45305	BT 2,2-40-4 IE3	140
45309	BT 3,0-80-4 IE3	140
45307	BT 4,0-50-4 IE3	140
45310	BT 4,0-80-4 IE3	140
45311	BT 5,5-80-4 IE3	140
45312	BT 7,5-100-4 IE3	140
45313	BT 11,0-100-4 IE3	140
45314	BT 15,0-125-4 IE3	140
51036	Buffer solution calibration set	237
51741	Cable transition 1/10 E	186
51740	Cable transition 2/15 E	186
57470	Cable transition 4/70 T	186
57464	Cable transition 7/100 T	186
57465	Cable transition 12/100 T	186
50911	Cascade 50 T	94
50912	Cascade 70 T	94
50915	Cascade 90 T	94
50916	Cascade 110 T	94
50917	Cascade 130 T	94
89051	Cascade 50 T / NPT	94
89052	Cascade 70 T / NPT	94
89053	Cascade 90 T / NPT	94
89054	Cascade 110 T / NPT	94

Order no.	Description	Page
89055	Cascade 130 T / NPT	94
57854	Clear Fountain System II	236
45480	Cluster Eco 15 - 38	72
51882	Cluster Eco 30 - 67	73
50721	Comet 3 - 6 silver	66
50762	Comet 5 - 8 silver	66
50722	Comet 5 - 10 silver	66
45454	Comet 10 - 12 Silver	66
50723	Comet 10 - 14 Silver	66
48276	Comet 15 - 15 silver	66
50724	Comet 15 - 17 silver	66
50959	Comet 3 - 5 T	68
50960	Comet 3 - 6 T	68
50964	Comet 5 - 8 T	68
50965	Comet 5 - 10 T	68
50968	Comet 10 - 12 T	68
50969	Comet 10 - 14 T	68
50970	Comet 15 - 17 T	68
50971	Comet 15 - 20 T	68
89012	Comet 3 - 6 T / NPT	68
89013	Comet 5 - 8 T / NPT	68
89014	Comet 5 - 10 T / NPT	68
89015	Comet 10 - 12 T / NPT	68
89016	Comet 10 - 14 T / NPT	68
89017	Comet 15 - 17 T / NPT	68
89018	Comet 15 - 20 T / NPT	68
50523	Comet Prec 20 - 20 Silver	70
45079	Comet Prec 30 - 30 silver	71
57467	Concrete part 100 T	186
57471	Concrete part 70 T	186
12768	Connection cable 12 V AC / 1.0 m /01	192
12374	Connection cable 12 V AC / 3.0 m /01	192
12375	Connection cable 12 V AC / 7.5 m /01	192
11740	Connection cable 12 V AC / 15.0 m /01	192
12762	Connection cable 24 V DC / 1.0 m /01	192
49629	Connection cable 24 V DC / 1.5 m /01	192
12552	Connection cable 24 V DC / 3.0 m /01	192
12553	Connection cable 24 V DC / 7.5 m /01	192
11720	Connection cable 24 V DC / 15.0 m /01	192
12368	Connection cable DMX / 1.0 m /01	194
49628	Connection cable DMX / 1.5 m /01	194
12369	Connection cable DMX / 3.0 m /01	194
12371	Connection cable DMX / 5.0 m /01	194
12372	Connection cable DMX / 10.0 m /01	194
12373	Connection cable DMX / 20.0 m /01	194
32780	CrownNozzle 24 20 E	58
53428	Crystal quartz sand	232
51974	Debris sieve 100 E	246
51973	Debris sieve 70 E	246
46230	Distance piece with blind caps	194
11702	DMX/RDM Booster/Splitter 1-4	223
57646	DMX-Box /01	194
51554	Electronic water level control 1	216
55846	Electronic water level control 2	216
12007	End resistant for BUS-system DMX/01	194
50728	Extension cable hybrid / 3.0 m	196

Order no.	Description	Page
56403	Extension cable hybrid / 7.5 m	196
53056	Fan Jet 10 - 6 E	80
53047	Fan Jet 15 - 8 E	80
46983	Fan Jet 30 - 11 E	81
51110	Finger nozzle 7 - 15	86
58975	FlashWall	54
42641	Floating fountain illumination set RGB	114
51141	Floor/wall transition 10-175 E	252
51142	Floor/wall transition 15-175 E	252
51143	Floor/wall transition 20-175 E	252
52790	Floor/wall transition 40-175 E	252
51145	Floor/wall transition F 10-175 E	252
51146	Floor/wall transition F 15-175 E	252
51147	Floor/wall transition F 20-175 E	252
53013	Floor/wall transition F 40-175 E	252
51033	Flow Valve 10	259
58909	Fog/Mist System	64
52126	FountainFlame /DMX/02	60
50991	Geyser 20 T	98
50992	Geyser 40 T	98
50993	Geyser 60 T	98
50995	Geyser 100 T	98
89023	Geyser 20 T / NPT	98
89024	Geyser 40 T / NPT	98
89025	Geyser 60 T / NPT	98
89027	Geyser 100 T / NPT	98
50377	Geyser Jet 30	76
50376	Grand Vulkan 30	84
50767	Gushing nozzle 115 - 15 silver	87
51022	Hexagon nippel 10 silver	258
51023	Hexagon nippel 15 silver	258
51024	Hexagon nippel 20 silver	258
51025	Hexagon nippel 30 silver	258
50375	High Jet 30	76
50966	Hollow Jet Nozzle 68	74
50973	Hollow Jet Nozzle 100	74
50963	Hollow Jet Nozzle 130	74
55350	Hollow Jet Nozzle 130	74
56404	Hybrid connection box	197
51071	Illumination set PondJet	114
53086	Inflow nozzle 15 E	252
51058	Installation kit JumpingJet Rainbow Star	259
34138	JumpingJet Rainbow Flash III /DMX/02	32
34137	JumpingJet Rainbow Star II /DMX/02	30
57486	JunctionBox 8/M20	188
50358	JunctionBox 14/M20	188
50786	Lamp Holder	178
50884	Lava 25 - 5 E	77
50889	Lava 30 - 10 E	77
50890	Lava 45 - 10 E	77
50891	Lava 60 - 10 E	77
58911	LED Stripes	176
42637	LED-floating fountain illumination white	114
70977	LED Modul MDD L 2D /DMX/02	180
70975	LED Modul MDD L 3D /DMX/02	180
45077	LED Modul MDD XL 2D /DMX/02	182

Order no.	Description	Page
48638	LED Modul MDD XL 3D /DMX/02	182
51117	Liner clamping flange 100 T	246
57474	Liner clamping flange 100 T KD	186
51108	Liner clamping flange 70 T	246
57473	Liner clamping flange 70 T KD	186
58912	LiquidArtWall	52
50371	MAXI II 4.0 kW / 400 V	110
50365	MIDI II 1.1 kW / 230 V	110
34318	Multi Directional Drive L 2D /DMX/02	38
34322	Multi Directional Drive L 3D /DMX/02	42
45076	Multi Directional Drive XL 2D /DMX/02	40
46982	Multi Directional Drive XL 3D /DMX/02	44
52219	Mylar lace 4/025	102
52218	Mylar lace nozzle 22 MS	102
52220	Mylar lace weight 20/100 MS	102
50477	NozzleChamber Single	244
50478	NozzleChamber Vario	244
51120	Overfl. wall-inst. comb. armature 100 E	255
57463	Overflow/drain armature 100/1000 T	248
57469	Overflow/drain armature 70/1000 T	248
52602	Overflow/return box 100 E	254
51062	OxyPool 9,9 %	237
48394	pH value reducer 51	237
57462	Plug 100 T	246
57468	Plug 70 T	246
54019	PondJet	108
57704	PondJet Eco	108
47930	Power connection box 24 V	197
57648	Power splice 20	190
57649	Power splice 43	191
43524	Power supply 85/265V AC/24 V DC 48W/2 A	223
50492	PowerBox 12 V AC /01	192
50493	PowerBox 24 V DC /01	192
56267	ProfiLux LED 110 /DMX/02	154
50717	ProfiLux LED 320 /DMX/02	156
56388	ProfiLux LED Spot 1500 /DMX/02	158
56391	ProfiLux LED Flood 1500 /DMX/02	160
56331	ProfiLux LED 350 /01	168
51296	ProfiLux LED 1100 /01	170
56401	ProfiLux LED Spot 2200 /01	172
56402	ProfiLux LED Flood 2200 /01	174
50296	ProfiMax 7000	136
57097	Profinaut 6000	137
56298	ProfiPlane LED 110 /DMX/02	162
50719	ProfiPlane LED 320 /DMX/02	164
50718	ProfiRing LED 320 /DMX/02	166
70430	QuickFix MDD L	39
51032	Reducing sleeve 15 x 10	259
51030	Reducing sleeve 20 x 15	259
50663	Refill pack ammonium/ammonia	241
50662	Refill pack hardness/carbonate hardness	241
50660	Refill pack nitrite/nitrate	241
50661	Refill pack phosphate	241
50664	Refill pack pH-value	241
51123	Return armature 200/100 T	250
50967	Rotating nozzle 5 - 15 E	88

Miscellaneous
Alphabetical Product Overview

Order no.	Description	Page
50473	Rotating nozzle 5 - 30 E	88
51161	Rotation modul L /DMX/02	46
50431	Sand filter D 600	232
50432	Sand filter D 800	232
50984	Schaumsprudler 35 - 10 E	90
50986	Schaumsprudler 55 - 10 E	90
50987	Schaumsprudler 55 - 15 E	90
50768	Schaumsprudler 75 - 20 silver	90
57480	Skimmer 250	235
51018	Sleeve 10 silver	258
51019	Sleeve 15 silver	258
51020	Sleeve 20 silver	258
51021	Sleeve 30 silver	258
51557	Solenoid valve 1" 24 V	216
51556	Solenoid valve 1/2" 24 V	216
51034	Sonde Ph	237
51035	Sonde Redox	237
53834	SPA 22-23	142
53835	SPA 22-33	142
53839	SPA 35-23	142
53841	SPA 35-43	142
53845	SPA 58-23	142
53846	SPA 58-33	142
53852	SPA 100-13	142
53854	SPA 100-33	142
53858	SPA 162-1-13	142
53859	SPA 162-13	142
53860	SPA 162-2-23	142
53864	SPA 280-1-13	142
53865	SPA 280-13	142
53866	SPA 280-2-23	142
57466	Standpipe 100/500 T	250
51082	Suction filter basket 200/100/15 E	256
51083	Suction filter basket 200/166/20 E	256
51084	Suction filter basket 200/250/25 E	256
51753	Suction filter basket 350/185/80/100E	256
54755	Suction filter basket 350/350/125 E	256
51756	Suction filter basket 600/280/150/200E	256
55843	Supplemental electrode 2000-1	218
51341	Switchgear EL 100 W	204
51342	Switchgear EL 101 W	204
51343	Switchgear EL 110 W	204
51344	Switchgear EL 111 W	204
50342	Swivel 24 V /DMX/02	36
51015	Swivel connection 10 silver	258
51016	Swivel connection 15 silver	258
51017	Swivel connection 20 silver	258
50378	Trumpet Jet 30	84
51334	Underwater cable connector T 3	188
50720	Underwater LED Driver /DMX/02	198
40289	Underwater power supply 250 / 24 V /01	202
50733	Underwater power supply 250 / 24 V /01	202
56411	Underwater Switch 24 V /DMX/02	200
50401	Underwater transformer UST 150 /01	222
50517	Underwater transformer UST 150 /A/01	222
55721	USP 412 W	138

Order no.	Description	Page
55720	USP 413 D	138
55727	USP 512 W	138
55726	USP 513 D	138
55732	USP 662 W	138
55735	USP 813 D	138
56506	USP H 673 D	138
52128	VarioJet 42 - 15	56
52129	VarioJet 55 - 20	56
58928	VarioJet CrownNozzle 20 E	59
50136	Varionaut 90 24 V /DMX/02	122
50650	Varionaut 150 24 V /DMX/02	124
50665	Varionaut 150 24 V /DMX/02	124
46821	Varionaut 240 24 V /DMX/02	126
50343	Varionaut 150 /DMX/02	128
57690	Varionaut 150 /DMX/02	128
40758	Varionaut 270 /DMX/02	130
40844	Varionaut 270 /DMX/02	130
46421	Varionaut 400 /DMX/02	132
33256	Varionaut 400 /DMX/02	132
57472	VarioSwitch 010a / 24 V	34
57435	VarioSwitch 015a / 24 V	34
50977	Vulcan 300 / 19 - 8 silver	85
50766	Vulcan 43 - 3 silver	85
54921	Wall Skimmer	234
50897	Water hemisphere 900	78
50898	Water hemisphere 1200	78
50899	Water hemisphere 1500	78
51762	Water hemisphere 2500	78
51763	Water hemisphere 3500	78
51764	Water hemisphere 6000	78
55845	Water level sensor 2000-3/5	218
51559	Water level sensor 20-3	218
53918	Water level sensor 20-4	218
50480	WaterScreenNozzle S	82
50481	WaterScreenNozzle XL	82
47736	ASM water stabilizer JumpingJet Fl. 2018	33
50894	Water sphere 900	78
50895	Water sphere 1200	78
50896	Water sphere 1500	78
51759	Water sphere 2500	78
51760	Water sphere 3500	78
51761	Water sphere 6000	78
56491	WECS II 512 /DMX/02	206
56492	WECS II 1024 /DMX/02	206
56507	WECS II 2048 /DMX/02	212
43525	WECS II 512/1024 web server-extension	208
58976	WECS II Software	214
43872	WECS LTE-Router	223
55009	WEPS Software	210
51838	Wind-dependent fountain control 3 K	220

Product Overview by order no.

Order no.	Description	Page
11702	DMX/RDM Booster/Splitter 1-4	223
11720	Connection cable 24 V DC / 15.0 m /01	192
11740	Connection cable 12 V AC / 15.0 m /01	192
12007	End resistant for BUS-system DMX/01	194
12368	Connection cable DMX / 1.0 m /01	194
12369	Connection cable DMX / 3.0 m /01	194
12371	Connection cable DMX / 5.0 m /01	194
12372	Connection cable DMX / 10.0 m /01	194
12373	Connection cable DMX / 20.0 m /01	194
12374	Connection cable 12 V AC / 3.0 m /01	192
12375	Connection cable 12 V AC / 7.5 m /01	192
12552	Connection cable 24 V DC / 3.0 m /01	192
12553	Connection cable 24 V DC / 7.5 m /01	192
12762	Connection cable 24 V DC / 1.0 m /01	192
12768	Connection cable 12 V AC / 1.0 m /01	192
32780	CrownNozzle 24 20 E	58
33256	Varionaut 400 /DMX/02	132
34137	JumpingJet Rainbow Star II /DMX/02	30
34138	JumpingJet Rainbow Flash III /DMX/02	32
34318	Multi Directional Drive L 2D /DMX/02	38
34322	Multi Directional Drive L 3D /DMX/02	42
40234	AquaActiv AlGo Fountain 5 l	237
40289	Underwater power supply 250 / 24 V /01	202
40758	Varionaut 270 /DMX/02	130
40844	Varionaut 270 /DMX/02	130
42637	LED-floating fountain illumination white	114
42641	Floating fountain illumination set RGB	114
43524	Power supply 85/265V AC/24 V DC 48W/2 A	223
43525	WECS II 512/1024 web server-extension	206
43872	WECS LTE-Router	223
45076	Multi Directional Drive XL 2D /DMX/02	40
45077	LED Modul MDD XL 2D /DMX/02	182
45079	Comet Prec 30 - 30 silver	71
45305	BT 2,2-40-4 IE3	140
45306	BT 1,5-50-4 IE3	140
45307	BT 4,0-50-4 IE3	140
45308	BT 1,1-65-4 IE3	140
45309	BT 3,0-80-4 IE3	140
45310	BT 4,0-80-4 IE3	140
45311	BT 5,5-80-4 IE3	140
45312	BT 7,5-100-4 IE3	140
45313	BT 11,0-100-4 IE3	140
45314	BT 15,0-125-4 IE3	140
45454	Comet 10 - 12 Silver	66
45480	Cluster Eco 15 - 38	72
46230	Distance piece with blind caps	194
46421	Varionaut 400 /DMX/02	132
46821	Varionaut 240 24 V /DMX/02	126
46982	Multi Directional Drive XL 3D /DMX/02	44
46983	Fan Jet 30 - 11 E	81
47736	ASM water stabilizer JumpingJet Fl. 2018	33
47930	Power connection box 24 V	197
48276	Comet 15 - 15 silver	66
48394	pH value reducer 51	237
48422	AirNozzle 20 E-6m vertical /01	48
48423	AirNozzle 20 E-14m vertical /01	48

Order no.	Description	Page
48424	AirNozzle 20 E-15m horizontal /01	48
48425	AirNozzle 24 E-20m horizontal /01	48
48426	AirNozzle 24 E-30m vertical /01	50
48427	AirNozzle 50 E-50m vertical /01	50
48428	AirNozzle 50 E-70m vertical /01	50
48638	LED Modul MDD XL 3D /DMX/02	182
49628	Connection cable DMX / 1.5 m /01	194
49629	Connection cable 24 V DC / 1.5 m /01	192
50136	Varionaut 90 24 V /DMX/02	122
50183	AirFlo 1.5 kW / 230 V	230
50185	AirFlo 4.0 kW / 400 V	230
50296	ProfiMax 7000	136
50342	Swivel 24 V /DMX/02	36
50343	Varionaut 150 /DMX/02	128
50358	JunctionBox 14/M20	188
50365	MIDI II 1.1 kW / 230 V	110
50371	MAXI II 4.0 kW / 400 V	110
50375	High Jet 30	76
50376	Grand Vulkan 30	84
50377	Geyser Jet 30	76
50378	Trumpet Jet 30	84
50401	Underwater transformer UST 150 /01	222
50431	Sand filter D 600	232
50432	Sand filter D 800	232
50433	AFM filter medium	232
50473	Rotating nozzle 5 - 30 E	88
50477	NozzleChamber Single	244
50478	NozzleChamber Vario	244
50480	WaterScreenNozzle S	82
50481	WaterScreenNozzle XL	82
50492	PowerBox 12 V AC /01	192
50493	PowerBox 24 V DC /01	192
50517	Underwater transformer UST 150 /A/01	222
50523	Comet Prec 20 - 20 Silver	70
50545	AquaActiv AlGo Universal 5 l	239
50549	AquaActiv AlGo Direct 5 l	240
50555	AquaActiv PondClear 5 l	240
50558	AquaActiv OptiPond 5 l	239
50561	AquaActiv SediFree 5 l	240
50571	AquaActiv Water analysis Profi-Set	241
50650	Varionaut 150 24 V /DMX/02	124
50660	Refill pack nitrite/nitrate	241
50661	Refill pack phosphate	241
50662	Refill pack hardness/carbonate hardness	241
50663	Refill pack ammonium/ammonia	241
50664	Refill pack pH-value	241
50665	Varionaut 150 24 V /DMX/02	124
50717	ProfiLux LED 320 /DMX/02	156
50718	ProfiRing LED 320 /DMX/02	166
50719	ProfiPlane LED 320 /DMX/02	164
50720	Underwater LED Driver /DMX/02	198
50721	Comet 3 - 6 silver	66
50722	Comet 5 - 10 silver	66
50723	Comet 10 - 14 Silver	66
50724	Comet 15 - 17 silver	66
50728	Extension cable hybrid / 3.0 m	196

Order no.	Description	Page
50733	Underwater power supply 250 / 24 V /01	202
50762	Comet 5 - 8 silver	66
50766	Vulcan 43 - 3 silver	85
50767	Gushing nozzle 115 - 15 silver	87
50768	Schaumsprudler 75 - 20 silver	90
50786	Lamp Holder	178
50884	Lava 25 - 5 E	77
50889	Lava 30 - 10 E	77
50890	Lava 45 - 10 E	77
50891	Lava 60 - 10 E	77
50894	Water sphere 900	78
50895	Water sphere 1200	78
50896	Water sphere 1500	78
50897	Water hemisphere 900	78
50898	Water hemisphere 1200	78
50899	Water hemisphere 1500	78
50911	Cascade 50 T	94
50912	Cascade 70 T	94
50915	Cascade 90 T	94
50916	Cascade 110 T	94
50917	Cascade 130 T	94
50959	Comet 3 - 5 T	68
50960	Comet 3 - 6 T	68
50963	Hollow Jet Nozzle 130	68
50964	Comet 5 - 8 T	68
50965	Comet 5 - 10 T	68
50966	Hollow Jet Nozzle 68	74
50967	Rotating nozzle 5 - 15 E	88
50968	Comet 10 - 12 T	68
50969	Comet 10 - 14 T	68
50970	Comet 15 - 17 T	68
50971	Comet 15 - 20 T	68
50973	Hollow Jet Nozzle 100	74
50977	Vulcan 300 / 19 - 8 silver	85
50984	Schaumsprudler 35 - 10 E	90
50986	Schaumsprudler 55 - 10 E	90
50987	Schaumsprudler 55 - 15 E	90
50991	Geyser 20 T	98
50992	Geyser 40 T	98
50993	Geyser 60 T	98
50995	Geyser 100 T	98
51015	Swivel connection 10 silver	258
51016	Swivel connection 15 silver	258
51017	Swivel connection 20 silver	258
51018	Sleeve 10 silver	258
51019	Sleeve 15 silver	258
51020	Sleeve 20 silver	258
51021	Sleeve 30 silver	258
51022	Hexagon nippel 10 silver	258
51023	Hexagon nippel 15 silver	258
51024	Hexagon nippel 20 silver	258
51025	Hexagon nippel 30 silver	258
51026	Adapter G 10 / NPT 10 Silver	258
51027	Adapter G 15 / NPT 15 Silver	258
51028	Adapter G 20 / NPT 20 Silver	258
51029	Adapter G 30 / NPT 30 Silver	258

Order no.	Description	Page
51030	Reducing sleeve 20 x 15	259
51032	Reducing sleeve 15 x 10	259
51033	Flow Valve 10	259
51034	Sonde Ph	237
51035	Sonde Redox	237
51036	Buffer solution calibration set	237
51058	Installation kit JumpingJet Rainbow Star	259
51062	OxyPool 9,9 %	237
51071	Illumination set PondJet	114
51082	Suction filter basket 200/100/15 E	256
51083	Suction filter basket 200/166/20 E	256
51084	Suction filter basket 200/250/25 E	256
51108	Liner clamping flange 70 T	246
51110	Finger nozzle 7 - 15	86
51117	Liner clamping flange 100 T	246
51120	Overfl. wall-inst. comb. armature 100 E	255
51123	Return armature 200/100 T	250
51141	Floor/wall transition 10-175 E	252
51142	Floor/wall transition 15-175 E	252
51143	Floor/wall transition 20-175 E	252
51145	Floor/wall transition F 10-175 E	252
51146	Floor/wall transition F 15-175 E	252
51147	Floor/wall transition F 20-175 E	252
51161	Rotation modul L /DMX/02	46
51165	Ball Joint 10	259
51287	AquaActiv PhosLess Direct 5 l	239
51296	ProfiLux LED 1100 /01	170
51334	Underwater cable connector T 3	188
51341	Switchgear EL 100 W	204
51342	Switchgear EL 101 W	204
51343	Switchgear EL 110 W	204
51344	Switchgear EL 111 W	204
51554	Electronic water level control 1	216
51556	Solenoid valve 1/2" 24 V	216
51557	Solenoid valve 1" 24 V	216
51559	Water level sensor 20-3	218
51740	Cable transition 2/15 E	186
51741	Cable transition 1/10 E	186
51753	Suction filter basket 350/185/80/100E	256
51756	Suction filter basket 600/280/150/200E	256
51759	Water sphere 2500	78
51760	Water sphere 3500	78
51761	Water sphere 6000	78
51762	Water hemisphere 2500	78
51763	Water hemisphere 3500	78
51764	Water hemisphere 6000	78
51838	Wind-dependent fountain control 3 K	220
51882	Cluster Eco 30 - 67	73
51973	Debris sieve 70 E	246
51974	Debris sieve 100 E	246
52126	FountainFlame /DMX/02	60
52127	BigFlameAqua	62
52128	VarioJet 42 - 15	56
52129	VarioJet 55 - 20	56
52218	Mylar lace nozzle 22 MS	102
52219	Mylar lace 4/025	102

Order no.	Description	Page
52220	Mylar lace weight 20/100 MS	102
52602	Overflow/return box 100 E	254
52790	Floor/wall transition 40-175 E	252
53013	Floor/wall transition F 40-175 E	252
53047	Fan Jet 15 - 8 E	80
53056	Fan Jet 10 - 6 E	80
53086	Inflow nozzle 15 E	252
53428	Crystal quartz sand	232
53834	SPA 22-23	142
53835	SPA 22-33	142
53839	SPA 35-23	142
53841	SPA 35-43	142
53845	SPA 58-23	142
53846	SPA 58-33	142
53852	SPA 100-13	142
53854	SPA 100-33	142
53858	SPA 162-1-13	142
53859	SPA 162-13	142
53860	SPA 162-2-23	142
53864	SPA 280-1-13	142
53865	SPA 280-13	142
53866	SPA 280-2-23	142
53913	Anemometer K	220
53918	Water level sensor 20-4	218
54019	PondJet	108
54755	Suction filter basket 350/350/125 E	256
54921	Wall Skimmer	234
55009	WEPS Software	210
55350	Hollow Jet Nozzle 130	74
55351	Backwash Automatic Eurotronik	232
55720	USP 413 D	138
55721	USP 412 W	138
55726	USP 513 D	138
55727	USP 512 W	138
55732	USP 662 W	138
55735	USP 813 D	138
55843	Supplemental electrode 2000-1	218
55845	Water level sensor 2000-3/5	218
55846	Electronic water level control 2	216
56267	ProfiLux LED 110 /DMX/02	154
56298	ProfiPlane LED 110 /DMX/02	162
56331	ProfiLux LED 350 /01	168
56388	ProfiLux LED Spot 1500 /DMX/02	158
56391	ProfiLux LED Flood 1500 /DMX/02	160
56401	ProfiLux LED Spot 2200 /01	172
56402	ProfiLux LED Flood 2200 /01	174
56403	Extension cable hybrid / 7.5 m	196
56404	Hybrid connection box	197
56404	Hybrid connection box	197
56411	Underwater Switch 24 V /DMX/02	200
56491	WECS II 512 /DMX/02	206
56492	WECS II 1024 /DMX/02	206
56506	USP H 673 D	138
56507	WECS II 2048 /DMX/02	212
56617	Aquarius Universal Premium 5000	134
56637	Aquarius Universal Premium 6000	134

Order no.	Description	Page
56876	Aquarius Universal Premium 9000	134
56879	Aquarius Universal Premium 12000	134
57097	Profinaut 6000	137
57435	VarioSwitch 015a / 24 V	34
57462	Plug 100 T	246
57463	Overflow/drain armature 100/1000 T	248
57464	Cable transition 7/100 T	186
57465	Cable transition 12/100 T	186
57466	Standpipe 100/500 T	250
57467	Concrete part 100 T	186
57468	Plug 70 T	246
57469	Overflow/drain armature 70/1000 T	248
57470	Cable transition 4/70 T	186
57471	Concrete part 70 T	186
57472	VarioSwitch 010a / 24 V	34
57473	Liner clamping flange 70 T KD	186
57474	Liner clamping flange 100 T KD	186
57479	AquaAir 250	228
57480	Skimmer 250	235
57486	JunctionBox 8/M20	188
57646	DMX-Box /01	194
57648	Power splice 20	190
57649	Power splice 43	191
57690	Varionaut 150 /DMX/02	128
57704	PondJet Eco	108
57854	Clear Fountain System II	236
58909	Fog/Mist System	64
58911	LED Stripes	176
58912	LiquidArtWall	52
58928	VarioJet CrownNozzle 20 E	59
58975	FlashWall	54
58976	WECS II Software	214
70430	QuickFix MDD L	39
70975	LED Modul MDD L 3D /DMX/02	180
70977	LED Modul MDD L 2D /DMX/02	180
89012	Comet 3 - 6 T / NPT	68
89013	Comet 5 - 8 T / NPT	68
89014	Comet 5 - 10 T / NPT	68
89015	Comet 10 - 12 T / NPT	68
89016	Comet 10 - 14 T / NPT	68
89017	Comet 15 - 17 T / NPT	68
89018	Comet 15 - 20 T / NPT	68
89023	Geyser 20 T / NPT	98
89024	Geyser 40 T / NPT	98
89025	Geyser 60 T / NPT	98
89027	Geyser 100 T / NPT	98
89051	Cascade 50 T / NPT	94
89052	Cascade 70 T / NPT	94
89053	Cascade 90 T / NPT	94
89054	Cascade 110 T / NPT	94
89055	Cascade 130 T / NPT	94

OASE-Commercial Quickfinder

Order no.	Product name	Fresh Water	Pool Water	Sea Water	220-240 V	400 V	110-120 V	50 Hz	60 Hz	12 V AC	24 V DC	DMX	DMX/ RDM	Plug and Spray	Page
	Nozzles														
48424	AirNozzle 20 E-15m horizontal /01	●	●	●*	○	○	○	○	○	○	●	○	○	●	48
48425	AirNozzle 24 E-20m horizontal /01	●	●	●*	○	○	○	○	○	○	●	○	○	●	48
48422	AirNozzle 15 E-6m vertical /01	●	●	●*	○	○	○	○	○	○	●	○	○	●	48
48423	AirNozzle 20 E-14m vertical /01	●	●	●*	○	○	○	○	○	○	●	○	○	●	48
48426	AirNozzle 24 E-30m vertical /01	●	●	●*	○	○	○	○	○	○	●	○	○	●	50
48427	AirNozzle 50 E-50m vertical /01	●	●	●*	○	○	○	○	○	○	●	○	○	●	50
48428	AirNozzle 50 E-70m vertical /01	●	●	●*	○	○	○	○	○	○	●	○	○	●	50
52127	BigFlameAqua	●	●	○	●	○	○	○	○	○	○	○	○	○	62
50911	Cascade 50 T	●	○	○	○	○	○	○	○	○	○	○	○	○	94
50912	Cascade 70 T	●	○	○	○	○	○	○	○	○	○	○	○	○	94
50915	Cascade 90 T	●	○	○	○	○	○	○	○	○	○	○	○	○	94
50916	Cascade 110 T	●	○	○	○	○	○	○	○	○	○	○	○	○	94
50917	Cascade 130 T	●	○	○	○	○	○	○	○	○	○	○	○	○	94
89051	Cascade 50 T / NPT	●	○	○	○	○	○	○	○	○	○	○	○	○	94
89052	Cascade 70 T / NPT	●	○	○	○	○	○	○	○	○	○	○	○	○	94
89053	Cascade 90 T / NPT	●	○	○	○	○	○	○	○	○	○	○	○	○	94
89054	Cascade 110 T / NPT	●	○	○	○	○	○	○	○	○	○	○	○	○	94
89055	Cascade 130 T / NPT	●	○	○	○	○	○	○	○	○	○	○	○	○	94
45480	Cluster Eco 15 - 38	●	●	●*	○	○	○	○	○	○	○	○	○	○	72
51882	Cluster Eco 30 - 67	●	●	●*	○	○	○	○	○	○	○	○	○	○	73
50721	Comet 3 - 6 silver	●	●	○	○	○	○	○	○	○	○	○	○	○	66
50762	Comet 5 - 8 silver	●	●	○	○	○	○	○	○	○	○	○	○	○	66
50722	Comet 5 - 10 silver	●	●	○	○	○	○	○	○	○	○	○	○	○	66
45454	Comet 10 - 12 silver	●	●	○	○	○	○	○	○	○	○	○	○	○	66
50723	Comet 10 - 14 Silver	●	●	○	○	○	○	○	○	○	○	○	○	○	66
48276	Comet 15 - 15 silver	●	●	○	○	○	○	○	○	○	○	○	○	○	66
50724	Comet 15 - 17 silver	●	●	○	○	○	○	○	○	○	○	○	○	○	66
50523	Comet Prec 20 - 20 Silver	●	●	●	○	○	○	○	○	○	○	○	○	○	70
45079	Comet Prec 30 - 30 silver	●	●	●	○	○	○	○	○	○	○	○	○	○	71
50959	Comet 3 - 5 T	●	○	○	○	○	○	○	○	○	○	○	○	○	68
50960	Comet 3 - 6 T	●	○	○	○	○	○	○	○	○	○	○	○	○	68
50964	Comet 5 - 8 T	●	○	○	○	○	○	○	○	○	○	○	○	○	68
50965	Comet 5 - 10 T	●	○	○	○	○	○	○	○	○	○	○	○	○	68
50968	Comet 10 - 12 T	●	○	○	○	○	○	○	○	○	○	○	○	○	68
50969	Comet 10 - 14 T	●	○	○	○	○	○	○	○	○	○	○	○	○	68
50970	Comet 15 - 17 T	●	○	○	○	○	○	○	○	○	○	○	○	○	68
50971	Comet 15 - 20 T	●	○	○	○	○	○	○	○	○	○	○	○	○	68
89012	Comet 3 - 6 T / NPT	●	○	○	○	○	○	○	○	○	○	○	○	○	68
89013	Comet 5 - 8 T / NPT	●	○	○	○	○	○	○	○	○	○	○	○	○	68
89014	Comet 5 - 10 T / NPT	●	○	○	○	○	○	○	○	○	○	○	○	○	68
89015	Comet 10 - 12 T / NPT	●	○	○	○	○	○	○	○	○	○	○	○	○	68
89016	Comet 10 - 14 T / NPT	●	○	○	○	○	○	○	○	○	○	○	○	○	68
89017	Comet 15 - 17 T / NPT	●	○	○	○	○	○	○	○	○	○	○	○	○	68
89018	Comet 15 - 20 T / NPT	●	○	○	○	○	○	○	○	○	○	○	○	○	68
32780	CrownNozzle 24 - 20 E	●	●	●*	○	○	○	○	○	○	○	○	○	○	58
53056	Fan Jet 10 - 6 E	●	●	●	○	○	○	○	○	○	○	○	○	○	80
53047	Fan Jet 15 - 8 E	●	●	●	○	○	○	○	○	○	○	○	○	○	80
46983	Fan Jet 30 - 11 E	●	●	●	○	○	○	○	○	○	○	○	○	○	81
51110	Finger nozzle 7 - 15 E	●	●	●	○	○	○	○	○	○	○	○	○	○	86
58975	FlashWall	●	○	○	●	○	●	●	●	○	○	●	○	○	54
58909	Fog/Mist System	●*	○	○	○	○	○	○	○	○	○	○	○	○	64
52126	FountainFlame / DMX / 02	●	●	○	●	○	○	●	●	○	●	●	●	○	60
50991	Geyser 20 T	●	○	○	○	○	○	○	○	○	○	○	○	○	98
50992	Geyser 40 T	●	○	○	○	○	○	○	○	○	○	○	○	○	98
50993	Geyser 60 T	●	○	○	○	○	○	○	○	○	○	○	○	○	98
50995	Geyser 100 T	●	○	○	○	○	○	○	○	○	○	○	○	○	98
89023	Geyser 20 T / NPT	●	○	○	○	○	○	○	○	○	○	○	○	○	98
89024	Geyser 40 T / NPT	●	○	○	○	○	○	○	○	○	○	○	○	○	98
89025	Geyser 60 T / NPT	●	○	○	○	○	○	○	○	○	○	○	○	○	98
89027	Geyser 100 T / NPT	●	○	○	○	○	○	○	○	○	○	○	○	○	98
50377	Geyser Jet 30	●	○	○	○	○	○	○	○	○	○	○	○	○	86

Order no.	Product name	Fresh Water	Pool Water	Sea Water	220-240 V	400 V	110-120 V	50 Hz	60 Hz	12 V AC	24 V DC	DMX	DMX/ RDM	Plug and Spray	Page
50376	Grand Vulcan 30	●	○	○	○	○	○	○	○	○	○	○	○	○	84
50767	Gushing nozzle 115 - 15 silver	●	●	○	○	○	○	○	○	○	○	○	○	○	87
50375	High Jet 30	●	○	○	○	○	○	○	○	○	○	○	○	○	76
50966	Hollow Jet Nozzle 68	●	●	○	○	○	○	○	○	○	○	○	○	○	74
50973	Hollow Jet Nozzle 100	●	●	○	○	○	○	○	○	○	○	○	○	○	74
55350	Hollow Jet Nozzle 130	●	●	○	○	○	○	○	○	○	○	○	○	○	74
50963	Hollow Jet Nozzle 130	●	●	●	○	○	○	○	○	○	○	○	○	○	74
50528	JumpingJet Rainbow Flash II /DMX/02	●	●	●*	○	○	○	●	○	●	○	●	●	●	32
34137	JumpingJet Rainbow Star II /DMX/02	●	●	○	○	○	○	○	○	○	●	●	●	●	30
50884	Lava 25 - 5 E	●	○	○	○	○	○	○	○	○	○	○	○	○	77
50889	Lava 30 - 10 E	●	○	○	○	○	○	○	○	○	○	○	○	○	77
50890	Lava 45 - 10 E	●	○	○	○	○	○	○	○	○	○	○	○	○	77
50891	Lava 60 - 10 E	●	○	○	○	○	○	○	○	○	○	○	○	○	77
58912	LiquidArtWall	●	○	○	●	●	●	●	●	○	○	●	●	●	52
34318	Multi Directional Drive L 2D /DMX/02	●	●	●	○	○	○	○	○	○	●	●	●	●	38
34322	Multi Directional Drive L 3 D/DMX/02	●	●	●	○	○	○	○	○	○	●	●	●	●	42
45076	Multi Directional Drive XL 2D /DMX/02	●	●	●	○	○	○	○	○	○	●	●	●	●	40
46982	Multi Directional Drive XL 3 D /DMX/02	●	●	●	○	○	○	○	○	○	●	●	●	●	44
52219	Mylar lace 4/025	●	○	○	○	○	○	○	○	○	○	○	○	○	102
52218	Mylar lace nozzle 22 MS	●	○	○	○	○	○	○	○	○	○	○	○	○	102
52220	Mylar lace weight 20/100 MS	●	○	○	○	○	○	○	○	○	○	○	○	○	102
50967	Rotating nozzle 5 - 15 E	●	○	○	○	○	○	○	○	○	○	○	○	○	88
50473	Rotating nozzle 5 - 30 E	●	○	○	○	○	○	○	○	○	○	○	○	○	88
51161	Rotation modul L /DMX/02	●	●	●	○	○	○	○	○	○	●	●	●	●	46
50984	Schaumsprudler 35 - 10 E	●	○	○	○	○	○	○	○	○	○	○	○	○	90
50986	Schaumsprudler 55 - 10 E	●	○	○	○	○	○	○	○	○	○	○	○	○	90
50987	Schaumsprudler 55 - 15 E	●	○	○	○	○	○	○	○	○	○	○	○	○	90
50768	Schaumsprudler 75 - 20 silver	●	●	○	○	○	○	○	○	○	○	○	○	○	90
50342	Swivel /DMX/02	●	●	●*	○	○	○	○	○	○	●	●	●	●	36
50378	Trumpet Jet 30	●	○	○	○	○	○	○	○	○	○	○	○	○	84
57472	VarioSwitch 010a / 24 V	●	○	○	○	○	○	○	○	○	●	○	○	○	34
57435	VarioSwitch 015a / 24 V	●	○	○	○	○	○	○	○	○	●	○	○	○	34
58928	VarioJet CrownNozzle 20 E	●	●	●*	○	○	○	○	○	○	○	○	○	○	59
52128	VarioJet 42 - 15	●	●	●*	○	○	○	○	○	○	○	○	○	○	56
52129	VarioJet 55 - 20	●	●	●*	○	○	○	○	○	○	○	○	○	○	56
50766	Vulcan 43 - 3 silver	●	●	○	○	○	○	○	○	○	○	○	○	○	85
50977	Vulcan 300 / 19 - 8 silver	●	●	○	○	○	○	○	○	○	○	○	○	○	85
50897	Water hemisphere 900	●	○	○	○	○	○	○	○	○	○	○	○	○	78
50898	Water hemisphere 1200	●	○	○	○	○	○	○	○	○	○	○	○	○	78
50899	Water hemisphere 1500	●	○	○	○	○	○	○	○	○	○	○	○	○	78
51762	Water hemisphere 2500	●	○	○	○	○	○	○	○	○	○	○	○	○	78
51763	Water hemisphere 3500	●	○	○	○	○	○	○	○	○	○	○	○	○	78
51764	Water hemisphere 6000	●	○	○	○	○	○	○	○	○	○	○	○	○	78
50480	WaterScreenNozzle S	●	●	○	○	○	○	○	○	○	○	○	○	○	82
50481	WaterScreenNozzle XL	●	●	●	○	○	○	○	○	○	○	○	○	○	82
50894	Water sphere 900	●	○	○	○	○	○	○	○	○	○	○	○	○	78
50895	Water sphere 1200	●	○	○	○	○	○	○	○	○	○	○	○	○	78
50896	Water sphere 1500	●	○	○	○	○	○	○	○	○	○	○	○	○	78
51759	Water sphere 2500	●	○	○	○	○	○	○	○	○	○	○	○	○	78
51760	Water sphere 3500	●	○	○	○	○	○	○	○	○	○	○	○	○	78
51761	Water sphere 6000	●	○	○	○	○	○	○	○	○	○	○	○	○	78
	Floating Fountains														
51071	Illumination set PondJet	●	○	○	○	○	●	○	●	●	○	○	○	●	114
42641	Floating fountain illumination set RGB	●	○	○	○	○	●	○	●	●	○	○	○	●	114
42637	LED-floating fountain illumination white	●	○	○	●	○	○	●	○	○	●*	○	○	●	114
50371	MAXI II 4,0 kW / 400 V	●	○	○	○	●	○	●	○	○	○	○	○	○	110
50365	MIDI II 1,1 kW / 230 V	●	○	○	●	○	○	●	○	○	○	○	○	○	110
54019	PondJet	●	○	○	○	○	●	○	●	○	○	○	○	○	108
57704	PondJet Eco	●	○	○	●	○	○	●	●	○	○	○	○	○	108

Miscellaneous
OASE-Commercial Quickfinder

Order no.	Product name	Fresh Water	Pool Water	Sea Water	220-240 V	400 V	110-120 V	50 Hz	60 Hz	12 V AC	24 V DC	DMX	DMX/ RDM	Plug and Spray	Page
	Pumps														
56617	Aquarius Universal Premium 5000	●	○	○	●	○	○	●	○	○	○	○	○	○	134
56637	Aquarius Universal Premium 6000	●	○	○	●	○	○	●	○	○	○	○	○	○	134
56876	Aquarius Universal Premium 9000	●	○	○	●	○	○	●	○	○	○	○	○	○	134
56879	Aquarius Universal Premium 12000	●	○	○	●	○	○	●	○	○	○	○	○	○	134
45308	BT 1.1-65-4 IE 3	●	○	○	○	●	○	●	○	○	○	○	○	○	140
45306	BT 1.5-50-4 IE 3	●	○	○	○	●	○	●	○	○	○	○	○	○	140
45305	BT 2.2-40-4 IE 3	●	○	○	○	●	○	●	○	○	○	○	○	○	140
45309	BT 3.0-80-4 IE 3	●	○	○	○	●	○	●	○	○	○	○	○	○	140
45307	BT 4.0-50-4 IE 3	●	○	○	○	●	○	●	○	○	○	○	○	○	140
45310	BT 4.0-80-4 IE 3	●	○	○	○	●	○	●	○	○	○	○	○	○	140
45311	BT 5.5-80-4 IE 3	●	○	○	○	●	○	●	○	○	○	○	○	○	140
45312	BT 7.5-100-4 IE 3	●	○	○	○	●	○	●	○	○	○	○	○	○	140
45313	BT 11.0-100-4 IE 3	●	○	○	○	●	○	●	○	○	○	○	○	○	140
45314	BT 15.0-125-4 IE 3	●	○	○	○	●	○	●	○	○	○	○	○	○	140
50296	ProfiMax 7000 USA	●	○	○	○	○	●	○	●	○	○	○	○	○	136
57097	Profinaut 6000 USA	●	○	○	○	○	●	○	●	○	○	○	○	○	137
53834	SPA 22-23	●	●*	●*	○	●	○	●	○	○	○	○	○	○	142
53835	SPA 22-33	●	●*	●*	○	●	○	●	○	○	○	○	○	○	142
53839	SPA 35-23	●	●*	●*	○	●	○	●	○	○	○	○	○	○	142
53841	SPA 35-43	●	●*	●*	○	●	○	●	○	○	○	○	○	○	142
53845	SPA 58-23	●	●*	●*	○	●	○	●	○	○	○	○	○	○	142
53846	SPA 58-33	●	●*	●*	○	●	○	●	○	○	○	○	○	○	142
53852	SPA 100-13	●	●*	●*	○	●	○	●	○	○	○	○	○	○	142
53854	SPA 100-33	●	●*	●*	○	●	○	●	○	○	○	○	○	○	142
53858	SPA 162-1-13	●	●*	●*	○	●	○	●	○	○	○	○	○	○	142
53859	SPA 162-13	●	●*	●*	○	●	○	●	○	○	○	○	○	○	142
53860	SPA 162-2-23	●	●*	●*	○	●	○	●	○	○	○	○	○	○	142
53864	SPA 280-1-13	●	●*	●*	○	●	○	●	○	○	○	○	○	○	142
53865	SPA 280-13	●	●*	●*	○	●	○	●	○	○	○	○	○	○	142
53866	SPA 280-2-23	●	●*	●*	○	●	○	●	○	○	○	○	○	○	142
55721	USP 412 W	●	○	○	●	○	○	●	○	○	○	○	○	○	138
55720	USP 413 D	●	○	○	○	●	○	●	○	○	○	○	○	○	138
55727	USP 512 W	●	○	○	●	○	○	●	○	○	○	○	○	○	138
55726	USP 513 D	●	○	○	○	●	○	●	○	○	○	○	○	○	138
55732	USP 662 W	●	○	○	●	○	○	●	○	○	○	○	○	○	138
55735	USP 813 D	●	○	○	○	●	○	●	○	○	○	○	○	○	138
56506	USP H 673 D	●	○	○	○	●	○	●	○	○	○	○	○	○	138
50136	Varionaut 90 24 V /DMX/02	●	●	○	○	○	○	○	○	○	●	●	●	●	122
50665	Varionaut 150 24 V /DMX/02	●	●	○	○	○	○	○	○	○	●	●	●	●	124
57650	Varionaut 150 24 V /DMX/02	●	●	○	○	○	○	○	○	○	●	●	●	●	124
46821	Varionaut 240 24 V /DMX/02	●	●	○	○	○	○	○	○	○	●	●	●	●	126
50343	Varionaut 150 /DMX/02	●	●	○	●	○	○	●	●	○	○	●	●	●	128
57690	Varionaut 150 /DMX/02	●	●	○	●	○	○	●	●	○	○	●	●	●	128
40758	Varionaut 270 /DMX/02	●	●	○	●	○	○	●	●	○	○	●	●	●	130
40844	Varionaut 270 /DMX/02	●	●	○	●	○	○	●	●	○	○	●	●	●	130
46421	Varionaut 400 /DMX/02	●	●	●	●	○	○	●	●	○	○	●	●	●	132
33256	Varionaut 400 /DMX/02	●	●	●	●	○	○	●	●	○	○	●	●	●	132
	Illumination														
50786	Lamp Holder	●	●	●	○	○	○	○	○	○	○	○	○	○	178
58916	LED Stripe	●	●	●*	○	○	○	○	○	○	●	●	○	○	176
70975	LED Modul MDD L 3D /DMX/02	●	●	●	○	○	○	○	○	○	●	●	●	●	180
70977	LED Modul MDD L 2D /DMX/02	●	●	●	○	○	○	○	○	○	●	●	●	●	180
48638	LED Modul MDD XL 3D /DMX/02	●	●	●	○	○	○	○	○	○	●	●	●	●	182
45077	LED Modul MDD XL 2D /DMX/02	●	●	●	○	○	○	○	○	○	●	●	●	●	182
56267	ProfiLux LED 110 /DMX/02	●	●	●	○	○	○	○	○	○	●	●	●	●	154
50717	ProfiLux LED 320 /DMX/02	●	●	●	○	○	○	○	○	○	●	●	●	●	156
56391	ProfiLux LED Flood 1500 /DMX/02	●	●	●	○	○	○	○	○	○	●	●	●	●	160
56388	ProfiLux LED Spot 1500 /DMX/02	●	●	●	○	○	○	○	○	○	●	●	●	●	158
56331	ProfiLux LED 350 /01	●	●	●	○	○	○	○	○	○	●	○	○	●	168
51296	ProfiLux LED 1100 /01	●	●	●	○	○	○	○	○	○	●	○	○	●	170

Order no.	Product name	Fresh Water	Pool Water	Sea Water	220-240 V	400 V	110-120 V	50 Hz	60 Hz	12 V AC	24 V DC	DMX	DMX/ RDM	Plug and Spray	Page
56401	ProfiLux LED Spot 2200 /01	●	●	●	○	○	○	○	○	○	●	○	○	●	172
56402	ProfiLux LED Flood 2200 /01	●	●	●	○	○	○	○	○	○	●	○	○	●	174
56298	ProfiPlane LED 110 /DMX/02	●	●	●	○	○	○	○	○	○	●	●	●	●	162
50719	ProfiPlane LED 320 /DMX/02	●	●	●	○	○	○	○	○	○	●	●	●	●	164
50718	ProfiRing LED 320 /DMX/02	●	●	●	○	○	○	○	○	○	●	●	●	●	166
	Power – Measure – Control – Regulate														
53913	Anemometer K	○	○	○	●	○	●	●	●	○	○	○	○	○	220
51741	Cable transition 1/10 E	●	○	○	○	○	○	○	○	○	○	○	○	○	186
51740	Cable transition 2/15 E	●	○	○	○	○	○	○	○	○	○	○	○	○	186
57470	Cable transition 4/70 T	●	○	○	○	○	○	○	○	○	○	○	○	○	186
57464	Cable transition 7/100 T	●	○	○	○	○	○	○	○	○	○	○	○	○	186
57465	Cable transition 12/100 T	●	○	○	○	○	○	○	○	○	○	○	○	○	186
57471	Concrete part 70 T	●	○	○	○	○	○	○	○	○	○	○	○	○	186
57467	Concrete part 100 T	●	○	○	○	○	○	○	○	○	○	○	○	○	186
12768	Connection cable 12 V AC / 1.0 m /01	●	●	●	○	○	○	●	●	●	○	○	○	●	192
12374	Connection cable 12 V AC / 3.0 m /01	●	●	●	○	○	○	●	●	●	○	○	○	●	192
12375	Connection cable 12 V AC / 7.5 m /01	●	●	●	○	○	○	●	●	●	○	○	○	●	192
11740	Connection cable 12 V AC / 15.0 m /01	●	●	●	○	○	○	●	●	●	○	○	○	●	192
12762	Connection cable 24 V DC / 1.0 m /01	●	●	●	○	○	○	○	○	○	●	○	○	●	192
49629	Connection cable 24 V DC / 1.5 m /01	●	●	●	○	○	○	○	○	○	●	○	○	●	192
12552	Connection cable 24 V DC / 3.0 m /01	●	●	●	○	○	○	○	○	○	●	○	○	●	192
12553	Connection cable 24 V DC / 7.5 m /01	●	●	●	○	○	○	○	○	○	●	○	○	●	192
11720	Connection cable 24 V DC / 15.0 m /01	●	●	●	○	○	○	○	○	○	●	○	○	●	192
12368	Connection cable DMX / 1.0 m /01	●	●	●	○	○	○	○	○	○	○	●	●	●	194
49628	Connection cable DMX / 1.5 m /01	●	●	●	○	○	○	○	○	○	○	●	●	●	194
12369	Connection cable DMX / 3.0 m /01	●	●	●	○	○	○	○	○	○	○	●	●	●	194
12371	Connection cable DMX / 5.0 m /01	●	●	●	○	○	○	○	○	○	○	●	●	●	194
12372	Connection cable DMX / 10.0 m /01	●	●	●	○	○	○	○	○	○	○	●	●	●	194
12373	Connection cable DMX / 20.0 m /01	●	●	●	○	○	○	○	○	○	○	●	●	●	194
57646	DMX-Box /01	●	●	●	○	○	○	○	○	○	○	●	●	●	194
51554	Electronic water level control 1	○	○	○	●	○	●	●	●	○	○	○	○	○	216
55846	Electronic water level control 2	○	○	○	●	○	●	●	●	○	○	○	○	○	216
12007	End resistant for BUS-system DMX/01	●	●	●	○	○	○	○	○	○	○	●	●	●	194
50728	Extension cable hybrid / 3.0 m /01	●	●	●	○	○	○	○	○	○	●	●	●	●	196
56403	Extension cable hybrid / 7.5 m /01	●	●	●	○	○	○	○	○	○	●	●	●	●	196
56404	Hybrid Connection box	●	●	●	○	○	○	○	○	○	●	●	●	●	196
57486	JunctionBox 8/M20	●	○	○	●	●	●	●	●	●	●	●	●	○	188
50358	JunctionBox 14/M20	●	○	○	●	●	●	●	●	●	●	●	●	○	188
57473	Liner clamping flange 70 T KD	●	○	○	○	○	○	○	○	○	○	○	○	○	186
57474	Liner clamping flange 100 T KD	●	○	○	○	○	○	○	○	○	○	○	○	○	186
50492	PowerBox 12 V AC /01	●	●	●	○	○	○	●	●	●	○	○	○	●	192
50493	PowerBox 24 V DC /01	●	●	●	○	○	○	○	○	○	●	○	○	●	192
47930	Power connection box 24 V	●	●	●	○	○	○	○	○	○	●	○	○	●	197
57648	Power splice 20	●	●	●	●	●	●	●	●	●	●	●	●	○	202
57649	Power splice 43	●	●	●	●	●	●	●	●	●	●	○	○	○	191
51556	Solenoid valve ½" 24 V	●	○	○	○	○	○	○	○	○	●	○	○	○	216
51557	Solenoid valve 1" 24 V	●	○	○	○	○	○	○	○	○	●	○	○	○	216
55843	Supplemental electrode 2000-1	●	●	○	○	○	○	○	○	○	○	○	○	○	218
51341	Switchgear EL 100 W	○	○	○	●	○	○	●	○	○	○	○	○	○	204
51342	Switchgear EL 101 W	○	○	○	●	○	○	●	○	○	○	○	○	○	204
51343	Switchgear EL 110 W	○	○	○	●	○	○	●	○	○	○	○	○	○	204
51344	Switchgear EL 111 W	○	○	○	●	○	○	●	○	○	○	○	○	○	204
51334	Underwater cable connector T 3	●	○	○	●	●	●	●	●	●	●	●	●	○	188
50720	Underwater LED Driver /DMX/02	●	●	●	○	○	○	○	○	○	●	●	●	●	198
40289	Underwater power supply 250 / 24 V /01	●	●	●	●	○	●	●	●	○	●	○	○	●	202
50733	Underwater power supply 250 / 24 V /01	●	●	●	●	○	●	●	●	○	●	○	○	●	202
56411	Underwater Switch 24 V /DMX/02	●	●	●	○	○	○	○	○	○	●	●	●	●	200
50401	Underwater transformer UST 150 /01	●	●	○	●	○	○	●	○	●	○	○	○	●	222
50517	Underwater transformer UST 150 /A/01	●	●	○	○	○	●	○	●	●	○	○	○	●	222
55845	Water level sensor 2000-3/5	●	●	○	○	○	○	○	○	○	○	○	○	○	232
51559	Water level sensor 20-3	●	●	○	○	○	○	○	○	○	○	○	○	○	232

Miscellaneous
Oase-Commercial Quickfinder

Order no.	Product name	Fresh Water	Pool Water	Sea Water	220-240 V	400 V	110-120 V	50 Hz	60 Hz	12 V AC	24 V DC	DMX	DMX/ RDM	Plug and Spray	Page
53918	Water level sensor 20-4	●	●	○	○	○	○	○	○	○	○	○	○	○	218
56491	WECS II 512 /DMX/02	○	○	○	○	○	○	○	○	○	●	●	●	●	206
56492	WECS II 1024 /DMX/02	○	○	○	○	○	○	○	○	○	●	●	●	●	206
56507	WECS II 2048 /DMX/02	○	○	○	●	○	●	●	●	○	○	●	●	●	212
51838	Wind-dependent fountain control 3 K	○	○	○	○	○	○	○	○	○	●	○	○	○	220
	Water Quality														
50433	AFM filter medium	●	●	○	○	○	○	○	○	○	○	○	○	○	232
50183	AirFlo 1,5 kW / 230 V	●	○	○	●	○	○	●	○	○	○	○	○	●	230
50185	AirFlo 4,0 kW / 400 V	●	○	○	○	●	○	●	○	○	○	○	○	●	230
50549	AquaActiv AlGo Direct 5 l	●	○	○	○	○	○	○	○	○	○	○	○	○	240
50545	AquaActiv AlGo Universal 5 l	●	○	○	○	○	○	○	○	○	○	○	○	○	239
50558	AquaActiv OptiPond 5 l	●	○	○	○	○	○	○	○	○	○	○	○	○	239
51287	AquaActiv PhosLess Direct	●	○	○	○	○	○	○	○	○	○	○	○	○	239
50555	AquaActiv PondClear 5 l	●	○	○	○	○	○	○	○	○	○	○	○	○	240
50561	AquaActiv SediFree 5 l	●	○	○	○	○	○	○	○	○	○	○	○	○	240
50571	AquaActiv Wasseranalyse Profi-Set	●	○	○	○	○	○	○	○	○	○	○	○	○	241
57479	AquaAir 250	●	○	○	●	○	○	●	○	○	○	○	○	○	228
55351	Backwash Automatic Eurotronik	●	●	○	●	○	○	●	○	○	○	○	○	○	232
51036	Buffer solution calibration set	●	●	○	○	○	○	○	○	○	○	○	○	○	237
57857	Clear Fountain System II	●	●	○	●	○	○	●	●	○	○	○	○	○	236
53428	Crystal quartz sand	●	●	○	○	○	○	○	○	○	○	○	○	○	232
51062	OxyPool	●	●	○	○	○	○	○	○	○	○	○	○	○	237
48394	PH value reducer 51	●	●	○	○	○	○	○	○	○	○	○	○	○	237
50431	Sand filter D 600	●	●	○	●	○	○	●	○	○	○	○	○	○	232
50432	Sand filter D 800	●	●	○	●	○	○	●	○	○	○	○	○	○	232
57480	Skimmer 250	●	○	○	●	○	○	●	○	○	○	○	○	○	235
51034	Sonde Ph	●	●	○	○	○	○	○	○	○	○	○	○	○	237
51035	Sonde Redox	●	●	○	○	○	○	○	○	○	○	○	○	○	237
54921	Wall Skimmer	●	●	○	○	○	○	○	○	○	○	○	○	○	234
	Accessories														
51026	Adapter G 10 / NPT 10	●	●	○	○	○	○	○	○	○	○	○	○	○	258
51027	Adapter G 15 / NPT 15	●	●	○	○	○	○	○	○	○	○	○	○	○	258
51028	Adapter G 20 / NPT 20	●	●	○	○	○	○	○	○	○	○	○	○	○	258
51029	Adapter G 30 / NPT 30	●	●	○	○	○	○	○	○	○	○	○	○	○	258
51165	Ball Joint 10	●	○	○	○	○	○	○	○	○	○	○	○	○	259
51973	Debris sieve 70 E	●	○	○	○	○	○	○	○	○	○	○	○	○	246
51974	Debris sieve 100 E	●	○	○	○	○	○	○	○	○	○	○	○	○	246
51141	Floor/wall transition 10-175 E	●	●	○	○	○	○	○	○	○	○	○	○	○	252
51142	Floor/wall transition 15-175 E	●	●	○	○	○	○	○	○	○	○	○	○	○	252
51143	Floor/wall transition 20-175 E	●	●	○	○	○	○	○	○	○	○	○	○	○	252
52790	Floor/wall transition 40-175 E	●	●	○	○	○	○	○	○	○	○	○	○	○	252
51145	Floor/wall transition F 10-175 E	●	●	○	○	○	○	○	○	○	○	○	○	○	252
51146	Floor/wall transition F 15-175 E	●	●	○	○	○	○	○	○	○	○	○	○	○	252
51147	Floor/wall transition F 20-175 E	●	●	○	○	○	○	○	○	○	○	○	○	○	252
53013	Floor/wall transition F 40-175 E	●	●	○	○	○	○	○	○	○	○	○	○	○	252
51033	Flow Valve 10	●	○	○	○	○	○	○	○	○	○	○	○	○	259
51022	Hexagon nippel 10 silver	●	●	●	○	○	○	○	○	○	○	○	○	○	258
51023	Hexagon nippel 15 silver	●	●	●	○	○	○	○	○	○	○	○	○	○	258
51024	Hexagon nippel 20 silver	●	●	●	○	○	○	○	○	○	○	○	○	○	258
51025	Hexagon nippel 30 silver	●	●	●	○	○	○	○	○	○	○	○	○	○	258
53086	Inflow nozzle 15 E	●	●	○	○	○	○	○	○	○	○	○	○	○	252
51058	Installation kit JumpingJet Rainbow Star	●	○	○	○	○	○	○	○	○	○	○	○	○	259
51108	Liner clamping flange 70 T	●	○	○	○	○	○	○	○	○	○	○	○	○	246
51117	Liner clamping flange 100 T	●	○	○	○	○	○	○	○	○	○	○	○	○	246
50477	NozzleChamber Single	●	○	○	○	○	○	○	○	○	○	○	○	○	244
50478	NozzleChamber Vario	●	○	○	○	○	○	○	○	○	○	○	○	○	244
51120	Overfl. wall-inst. comb. armature 100 E	●	○	○	○	○	○	○	○	○	○	○	○	○	255
57469	Overflow/drain armature 70/1000 T	●	○	○	○	○	○	○	○	○	○	○	○	○	248
57463	Overflow/drain armature 100/1000 T	●	○	○	○	○	○	○	○	○	○	○	○	○	248
52602	Overflow/return Box 100 E	●	○	○	○	○	○	○	○	○	○	○	○	○	254

Order no.	Product name	Fresh Water	Pool Water	Sea Water	220-240 V	400 V	110-120 V	50 Hz	60 Hz	12 V AC	24 V DC	DMX	DMX/ RDM	Plug and Spray	Page
57468	Plug 70 T	●	○	○	○	○	○	○	○	○	○	○	○	○	246
57462	Plug 100 T	●	○	○	○	○	○	○	○	○	○	○	○	○	246
51032	Reducing sleeve 15 x 10	●	●	●	○	○	○	○	○	○	○	○	○	○	259
51030	Reducing sleeve 20 x 15	●	●	●	○	○	○	○	○	○	○	○	○	○	259
51123	Return armature 200/100 T	●	○	○	○	○	○	○	○	○	○	○	○	○	250
51018	Sleeve 10 silver	●	●	●	○	○	○	○	○	○	○	○	○	○	258
51019	Sleeve 15 silver	●	●	●	○	○	○	○	○	○	○	○	○	○	258
51020	Sleeve 20 silver	●	●	●	○	○	○	○	○	○	○	○	○	○	258
51021	Sleeve 30 silver	●	●	●	○	○	○	○	○	○	○	○	○	○	258
57466	Standpipe 100/500 T	●	○	○	○	○	○	○	○	○	○	○	○	○	250
51082	Suction filter basket 200/100/15 E	●	○	○	○	○	○	○	○	○	○	○	○	○	256
51083	Suction filter basket 200/166/20 E	●	○	○	○	○	○	○	○	○	○	○	○	○	256
51084	Suction filter basket 200/250/25 E	●	○	○	○	○	○	○	○	○	○	○	○	○	256
51753	Suction filter basket 350/185/80/100 E	●	○	○	○	○	○	○	○	○	○	○	○	○	256
54755	Suction filter basket 350/350/125 E	●	○	○	○	○	○	○	○	○	○	○	○	○	256
51756	Suction filter basket 600/280/150/200 E	●	○	○	○	○	○	○	○	○	○	○	○	○	256
51015	Swivel connection 10 silver	●	●	○	○	○	○	○	○	○	○	○	○	○	258
51016	Swivel connection 15 silver	●	●	○	○	○	○	○	○	○	○	○	○	○	258
51017	Swivel connection 20 silver	●	●	○	○	○	○	○	○	○	○	○	○	○	258

Miscellaneous
OASE-Commercial Quickfinder

Notes

Notes

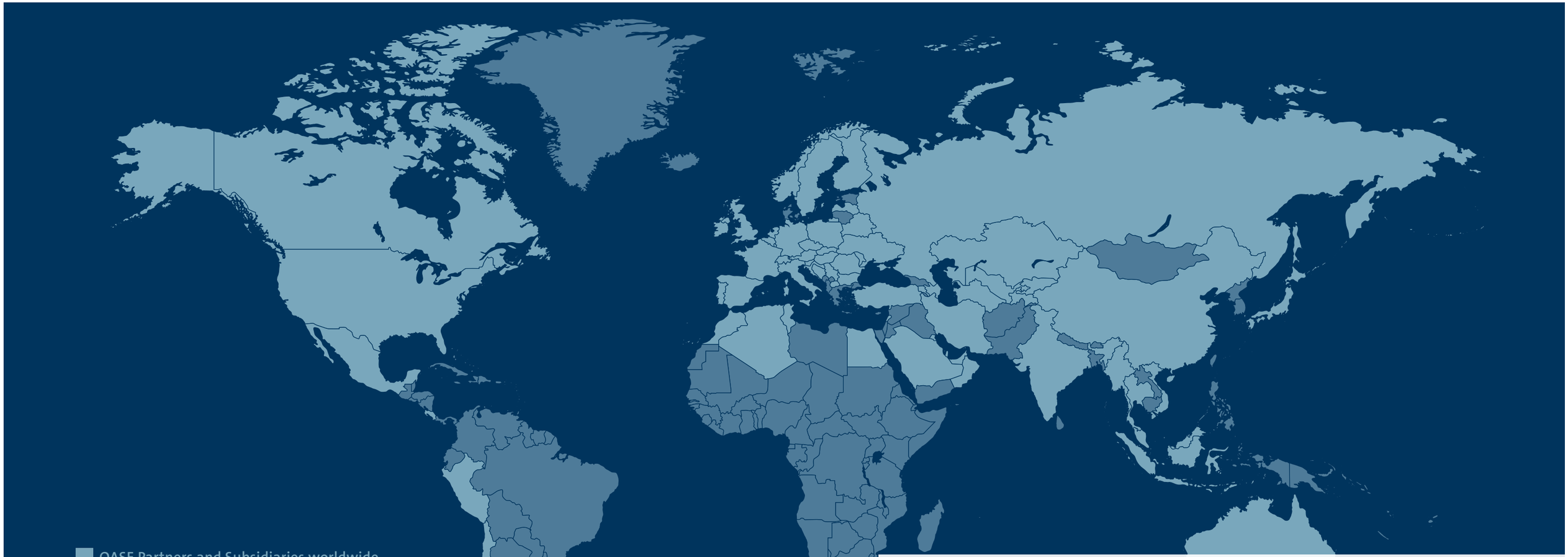

OASE Partners and Subsidiaries worldwide

Partners & Subsidiarys

In operation worldwide

OASE is globally active so it can provide clients with complete support. Besides certified partners in numerous countries, we also have 750 employees worldwide. These specialists in OASE technology expertly supervise our clients' projects on site from A to Z.

OASE. THE GLOBAL PARTNER. PASSIONATE ABOUT WATER.

SERVICE HOTLINE
+49 (0)5454 3383 399

EMAIL
info@oase-livingwater.com
hospitality@oase-livingwater.com
shoppingmalls@oase-livingwater.com
publicareas@oase-livingwater.com

LIVE CHAT VIA SKYPE
OASE Service Fountain Technology

FIND PARTNERS
www.oase-livingwater.com/locations

OASE GmbH
Tecklenburger Str. 161
48477 Hörstel
Germany
✆ +49 5454 80-0
🖷 +49 5454 80-9253
✉ info@oase-livingwater.com

OASE (UK) LTD.
The Old Cart Shed
Apsley Barns
Andover
Hampshire SP11 6NA
United Kingdom
✆ +44 1256 896886
🖷 +44 1256 896489
✉ enquiries@oase-livingwater.com

OASE B.V.
Postbus 1125
3860 BC Nijkerk
Belgium
✆ +31 (0) 900 246 22 10
🖷 +31 (0) 800 023 01 86
✉ info.nl@oase-livingwater.com (NL)

OASE B.V.B.A.
Dooren 107
1785 Merchtem
Belgium
✆ +32 (0) 52 48 47 60
🖷 +32 (0) 52 48 47 61
✉ info.be@oase-livingwater.com (B)

OASE S.A.
Avenue de la Marne
Parc du Molinel
Bât F – Rez de Chaussée
59290 WASQUEHAL
France
✆ +33 03 20 82 00 45
🖷 +33 03 20 82 99 32
✉ info.fr@oase-livingwater.com

OASE ESPAÑA Casa Jardín S.L.U.
Ctra. Fuencarral 44
Edif 5 Loft 24
28108 Alcobendas
Madrid
Spain
✆ +34 (0) 91 499 07 29
🖷 +34 (0) 91 666 56 87
✉ info.es@oase-livingwater.com

OASE Kereskedelmi Kft
Hegyalja út 7-13
1016 Budapest
Hungary
✆ +36 1 393 50 40
🖷 +36 1 393 50 41
✉ info.hu@oase-livingwater.com

OASE Spólka z o.o.
Al. Jerozolimskie 200 lok. 538
02-486 Warszawa
Poland
✆ +48 (22) 32 37 111
🖷 +48 (22) 32 37 115
✉ info.pl@oase-livingwater.com

OASE Türkiye
Barbaros Mh.Ihlamur (Hasat sk) No:3
Uphill Towers B Blok D:55
34746 Atasehir / Istanbul
✆ +90 216 688 14 60
🖷 +90 216 688 14 57
✉ info.tr@oase-livingwater.com

OASE Asia Pacific PTE Ltd.
7030 Ang Mo Kio Ave 5
#08-69
northstar@AMK
Singapore 569880
✆ +65 6337 2838
🖷 +65 6337 6878
✉ info@oase-livingwater.com.sg

OASE Middle East FZE
Dubai Airport Freezone
East Wing Building 1E Unit 202
P.O. Box 54966
Dubai, U.A.E
✆ +97 14 29 94 847
🖷 +97 14 29 94 839
✉ uae@oase-livingwater.com

OASE China
No. 80 North Dongting Road
Taicang, Jiangsu
China
✆ +86 512 5371 9578
🖷 +86 512 5371 9555
✉ info@oase-livingwater.cn

OASE North America
1727 Old Okeechobee Road
West Palm Beach, FL 33409
United States
✆ +1 800 365 3880
🖷 +1 800 262 7339
✉ info.na@oase-livingwater.com

OASE Italia Srl
Via delle Industrie, 16
36050 Cartigliano (VI)
Italy
✆ +39 042 45 90 866
🖷 +39 042 48 27 342
✉ info.it@oase-livingwater.com

OASE Japan
Yokohama West Bldg. 2F
27-9 Kusunoki-cho, Nishi-ku
Yokohama-shi
kangawa 220-0003
Japan
✆ +81 45 594-8440
🖷 +81 45 594-8441
✉ customer-service.jp@oase-livingwater.com

www.oase-livingwater.com

61532/11-18-RK
Use of the image data only after obtaining express approval from OASE. The products listed in this catalogue are designed for the respective described application and have been tested accordingly.
OASE assumes no liability whatsoever for applications that deviate from the described application. We reserve the right to deviate slightly from the text and illustrations in this catalogue in the interest of technical progress.
With release of this catalogue, any former edition is invalid.